SERVICE MANUAL
AH-08-04.2
(REPALACE: AH-08-04.1)
February - 2013

Ransburg

VECTOR SOLO™ AA90 APPLICATORS

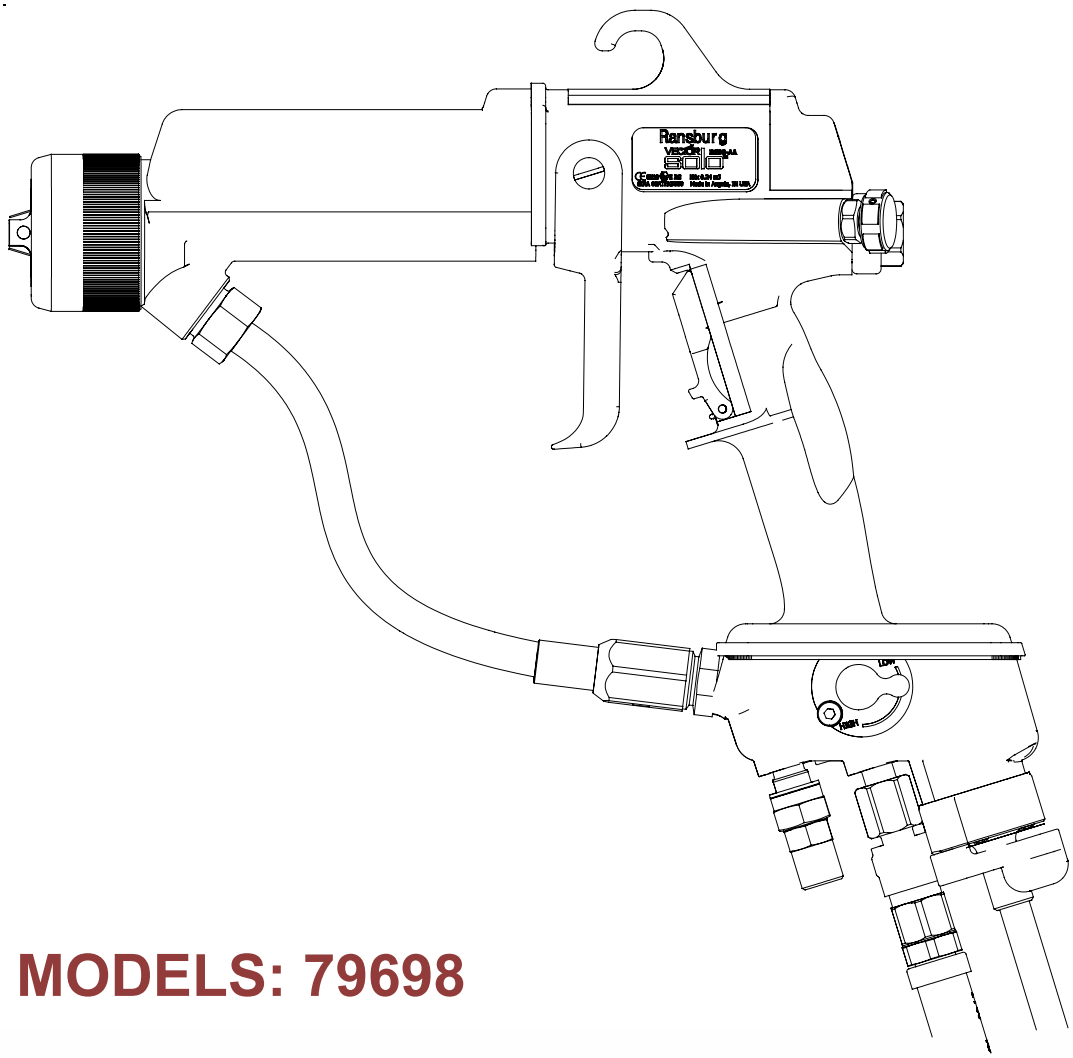

MODELS: 79698

FM APPROVED

IMPORTANT: Before using this equipment, carefully read SAFETY PRECAUTIONS, starting on page 1, and all instructions in this manual. Keep this Service Manual for future reference.

Service Manual Price: $50.00 (U.S.)

NOTE: This manual has been changed from revision AH-08-04.1 to revision AH-08-04.2. Reasons for this change are noted under “Manual Change Summary” inside the back cover of this manual.

CONTENTS

	PAGE
SAFETY:	**1-4**
SAFETY PRECAUTIONS	1
HAZARDS / SAFEGUARDS	2-4
ATEX/FM:	**5-8**
EUROPEAN ATEX DIRECTIVE	5
EUROPEAN ATEX LABELS	6
FM CONFIGURATION DRAWING	7-8
INTRODUCTION:	**9-12**
GENERAL DESCRIPTION	9
79698 VECTOR SOLO AA90 SPECIFICATIONS	10
VECTOR SOLO AA90 SOLVENTBORNE ELECTROSTATIC SPRAY APPLICATOR	11
VECTOR SOLO AA90 TYPICAL SOLVENTBORNE INSTALLATION	12
INSTALLATION:	**13-14**
79698 SOLO SOLVENTBORNE INSTALLATION	13-14
INSTALLATION	14
OPERATION:	**16-20**
SAFE OPERATION	16-18
FLUSHING / COLOR CHANGE PROCEDURE	18-19
THE RIGHT TECHNIQUE	19
PREPARATION	20
MAINTENANCE:	**21-43**
SUITABLE SOLVENTS FOR CLEANING VECTOR SOLO APPLICATORS	21
ROUTINE SCHEDULE	22-23
APPLICATOR REPAIR	23
FLUSHING PROCEDURES	24
APPLICATOR ASSEMBLY CLEANING PROCEDURE	24-27
BARREL REMOVAL	27-30
NEEDLE SHAFT REMOVAL/REPLACEMENT	31-37
TEST AND MAINTENANCE KIT USAGE (79870-00)	37-40
TROUBLESHOOTING GUIDE	41-43
PARTS IDENTIFICATION:	**44-51**
79698 VECTOR SOLO AA90 APPLICATOR MODEL IDENTIFICATION	44
AIR HOSE LENGTH AND TYPE	44
TRIGGER TYPE	45
SPRAY TIP SIZE	45
FLUID HOSE LENGTH	45

(Continued On Next Page)

CONTENTS (Cont.)

PARTS IDENTIFICATION (Cont.): 44-51

VECTOR SOLO AA90 SOLVENTBORNE APPLICATOR PARTS BREAKDOWN 46
VECTOR SOLO AA90 SOLVENTBORNE APPLICATOR PARTS LIST 47-48
POWER MODULE REPLACEABLE PARTS - PARTS LIST 48
AIR HOSE ASSEMBLY PARTS LIST 49
HIGH PRESSURE WHIP AND FITTING PARTS LIST 49
NEEDLE SHAFT ASSEMBLY PARTS LIST 50
FLUID HOSE PARTS LIST 50
TEST AND MAINTENANCE KIT 51
VECTOR SOLO AA90 APPLICATOR RECOMMENDED SPARE PARTS 51

WARRANTY POLICIES: 52

LIMITED WARRANTY 52

SAFETY

SAFETY PRECAUTIONS

Before operating, maintaining or servicing any Ransburg electrostatic coating system, read and understand all of the technical and safety literature for your Ransburg products. This manual contains information that is important for you to know and understand. This information relates to USER SAFETY and PREVENTING EQUIPMENT PROBLEMS. To help you recognize this information, we use the following symbols. Please pay particular attention to these sections.

A WARNING! States information to alert you to a situation that might cause serious injury if instructions are not followed.

A CAUTION! States information that tells how to prevent damage to equipment or how to avoid a situation that might cause minor injury.

A NOTE is information relevant to the procedure in progress.

While this manual lists standard specifications and service procedures, some minor deviations may be found between this literature and your equipment. Differences in local codes and plant requirements, material delivery requirements, etc., make such variations inevitable. Compare this manual with your system installation drawings and appropriate Ransburg equipment manuals to reconcile such differences.

Careful study and continued use of this manual will provide a better understanding of the equipment and process, resulting in more efficient operation, longer trouble-free service and faster, easier troubleshooting. If you do not have the manuals and safety literature for your Ransburg system, contact your local Ransburg representative or Ransburg.

WARNING

➤ The user **MUST** read and be familiar with the Safety Section in this manual and the Ransburg safety literature therein identified.

➤ This hand held device is intended to be used by trained personnel ONLY.

➤ This manual **MUST** be read and thoroughly understood by **ALL** personnel who operate, clean or maintain this equipment! Special care should be taken to ensure that the **WARNINGS** and safety requirements for operating and servicing the equipment are followed. The user should be aware of and adhere to **ALL** local building and fire codes and ordinances as well as **NFPA-33 EN 50176 SAFETY STANDARD, or applicable country safety standards** prior to installing, operating, and/or servicing this equipment.

WARNING

➤ The hazards shown on the following page may occur during the normal use of this equipment. Please read the hazard chart beginning on page 2.

AREA Tells where hazards may occur.	**HAZARD** Tells what the hazard is.	**SAFEGUARDS** Tells how to avoid the hazard.
Spray Area 	**Fire Hazard** Improper or inadequate operation and maintenance procedures will cause a fire hazard. Protection against inadvertent arcing that is capable of causing fire or explosion is lost if any safety interlocks are disabled during operation. Frequent power supply shutdown indicates a problem in the system requiring correction.	Fire extinguishing equipment must be present in the spray area and tested periodically. Spray areas must be kept clean to prevent the accumulation of combustible residues. Smoking must never be allowed in the spray area. The high voltage supplied to the atomizer must be turned off prior to cleaning, flushing or maintenance. When using solvents for cleaning: • Those used for equipment flushing should have flash points equal to or higher than those of the coating material. • Those solvents used for cleaning must have a flash point at minimum of 5°C (9°F) greater than the ambient temperature. It is the end users responsibility to insure this condition is met. Spray booth ventilation must be kept at the rates required by NFPA-33, OSHA, country, and local codes. In addition, ventilation must be maintained during cleaning operations using flammable or combustible solvents. Electrostatic arcing must be prevented. Safe sparking distance must be maintained between the parts being coated and the applicator. A distance of 1 inch for every 10KV of output voltage is required at all times. Test only in areas free of combustible material. Testing may require high voltage to be on, but only as instructed. Non-factory replacement parts or unauthorized equipment modifications may cause fire or injury. If used, the key switch bypass is intended for use only during setup operations. Production should never be done with safety interlocks disabled. Never use equipment intended for use in waterborne installations to spray solvent based materials. The paint process and equipment should be set up and operated in accordance with NFPA-33, NEC, OSHA, local, country, and European Health and Safety Norms.

AREA Tells where hazards may occur.	**HAZARD** Tells what the hazard is.	**SAFEGUARDS** Tells how to avoid the hazard.
Toxic Substances 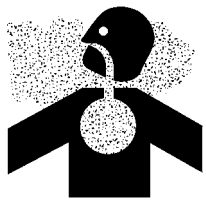	Certain material may be harmful if inhaled, or if there is contact with the skin.	Follow the requirements of the Material Safety Data Sheet supplied by coating material manufacturer. Adequate exhaust must be provided to keep the air free of accumulations of toxic materials. Use a mask or respirator whenever there is a chance of inhaling sprayed materials. The mask must be compatible with the material being sprayed and its concentration. Equipment must be as prescribed by an industrial hygienist or safety expert, and be approved.
Explosion Hazard / Incompatible Materials 	Halogenated hydrocarbon solvents, for example: methylene chloride and 1,1,1, - Trichloroethane, are not chemically compatible with the aluminum that might be used in many system components. The chemical reaction caused by these solvents reacting with aluminum can become violent and lead to an equipment explosion.	Spray applicators require that aluminum inlet fittings be replaced with stainless steel. (See "Accessories" list) Aluminum is widely used in other spray application equipment - such as material pumps, regulators, valves, etc. Check all other equipment items before use and make sure they can also be used safely with these solvents. Read the label or data sheet for the material you intend to spray. If in doubt as to whether or not a coating or cleaning material is compatible, contact your material supplier. Any other type of solvent may be used with aluminum equipment.
Electrical Equipment 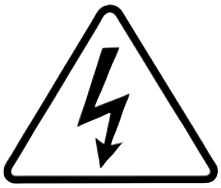	High voltage equipment is utilized. Arcing in areas of flammable or combustible mat-erials may occur. Personnel are exposed to high voltage during operation and maintenance. Protection against inadvertent arcing that may cause a fire or explosion is lost if safety circuits are disabled during operation. An electrical arc can ignite coating materials and cause a fire or explosion.	Turn the power module OFF before working on the equipment. Test only in areas free of flammable or combustible material. Testing may require high voltage to be on, but only as instructed. Production should never be done with the safety circuits disabled. Before turning the high voltage on, make sure no objects are within the sparking distance.

AREA Tells where hazards may occur.	**HAZARD** Tells what the hazard is.	**SAFEGUARDS** Tells how to avoid the hazard.
Spray Area	Electrostatic Arcing	Never operate the applicator without properly grounding the following. A. Operators Operators must be grounded. Rubber soled insulating shoes should not be worn. Grounding leg or wrist straps may be used. Operators must maintain contact with the handle of the applicator. If work gloves are used, the palm section must be cut out. Operators must remove from themselves all metal objects that are not grounded. **NOTE:** REFER TO NFPA-33 REGARDING OPERATOR GROUNDING OR SPECIFIC COUNTRY SAFETY CODE. B. Parts being sprayed. Resistance between the part and a grounded conveyor must not exceed 1 megohm. C. Every metal and conductive object in the spray area. This includes the booth, parts hangers, fire extinguishers, conductive flooring, etc. Grounded conductive flooring must be provided in the spray area. Turn off voltage at the power module before flushing out, cleaning, or removing any parts from the applicator. Never install an applicator into a fluid system using an isolated solvent supply. Do not touch applicator electrode while applicator is energized.
General Use and Maintenance	Improper operation or maintenance may create a hazard. Personnel must be properly trained in the use of this equipment.	Personnel must be given training in accordance with the requirements of NFPA-33. Instructions and safety precautions must be read and understood prior to using this equipment. Comply with appropriate local, state, and national codes governing ventilation, fire protection, operation maintenance, and housekeeping.

EUROPEAN ATEX DIRECTIVE 94/9/EC, ANNEX II, 1.0.6

The following instructions apply to equipment covered by certificate number Sira 08ATEX5060:

1. The equipment may be used with flammable gases and vapors with apparatus groups II and with temperature class T6.

2. The equipment is only certified for use in ambient temperatures in the range 0°C to +40°C and should not be used outside this range.

3. Installation shall be carried out by suitably trained personnel in accordance with the applicable code of practice e.g. EN 60079-14:1997.

4. Inspection and maintenance of this equipment shall be carried out by suitably trained personnel in accordance with the applicable code of practice e.g. EN 60079-17.

5. Repair of this equipment shall be carried out by suitable trained personnel in accordance with the applicable code of practice e.g. EN 60079-19.

6. Putting into service, use, assembling, and adjustment of the equipment shall be fitted by suitably trained personnel in accordance with the manufacturer's documentation.

Refer to the "Table of Contents" of this service manual:

a. Installation
b. Operation
c. Maintenance
d. Parts Identification

7. Components to be incorporated into or used as replacement parts of the equipment shall be fitted by suitably trained personnel in accordance with the manufacturer's documentation.

8. The certification of this equipment relies upon the following materials used in its construction:

If the equipment is likely to come into contact with aggressive substances, then it is the responsibility of the user to take suitable precautions that prevent it from being adversely affected, thus ensuring that the type of protection provided by the equipment is not compromised.

Aggressive substances: e.g. acidic liquids or gases that may attack metals, or solvents that may affect polymeric materials.

Suitable precautions: e.g. regular checks as part of routine inspections or establishing from the material's data sheets that it is resistant to specific chemicals.

Refer to "Specifications" in the "Introduction" section:

a. All fluid passages contain stainless steel or nylon fittings.
b. High voltage cascade is encapsulated with a solvent resistant epoxy.

9. A recapitulation of the certification marking is detailed in the "ATEX" section, on the next page, drawing numbers: 79852-02 and 79864-02.

10. The characteristics of the equipment shall be detailed e.g. electrical, pressure, and voltage parameters.

The manufacturer should note that, on being put into service, the equipment must be accompanied by a translation of the instructions in the language or languages of the country in which the equipment is to be used and by the instructions in the original language.

Vector Solo AA90 79698 ATEX Product Marking Definitions

Ex Certificate Number: Sira 08ATEX5060

Sira = Notified Body performing EC-type examination
08 = Year of certification
ATEX = Reference to ATEX Directive
5 = Protection Concept Code (code 5 is titled Encapsulation)
060 = Document serial number
X = Special conditions for safe use apply

Special conditions for safe use: The Vector Solo AA90 79698 Applicators shall only be used with associated Ransburg 79727-XX Air Hose Assembly. It is the end users responsibility to insure the air hose is properly grounded to true earth ground.

Product Marking

Ex II 2 G

Ex = Specific marking of explosive protection
II = Equipment Group hazardous area charac-ter-istics
2 = Equipment Category
G = Type of explosive atmosphere (gases, vapors, or mists)

EEx 0.24mJ = The Vector Solo AA90 79698 Applicators are suitable for use in manual spraying installations complying with EN 50 050 as they are a Type A class with a discharge energy limit of 0.24mJ.

Label 79852-02

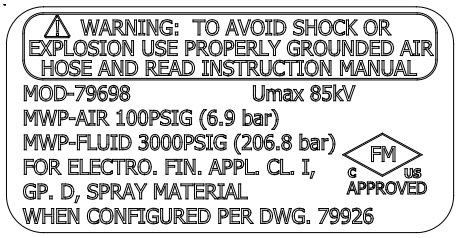

Label 79846-02

FM Configuration

This applicator is FM approved when configured to drawing 79926 shown on page 7 and 8.

VECTOR SOLO RS90-AA SOLVENT BASED

79698 - ABCDE

BASE MODEL NO. — OPTION DESIGNATIONS

(ORDERING INFORMATION ONLY)

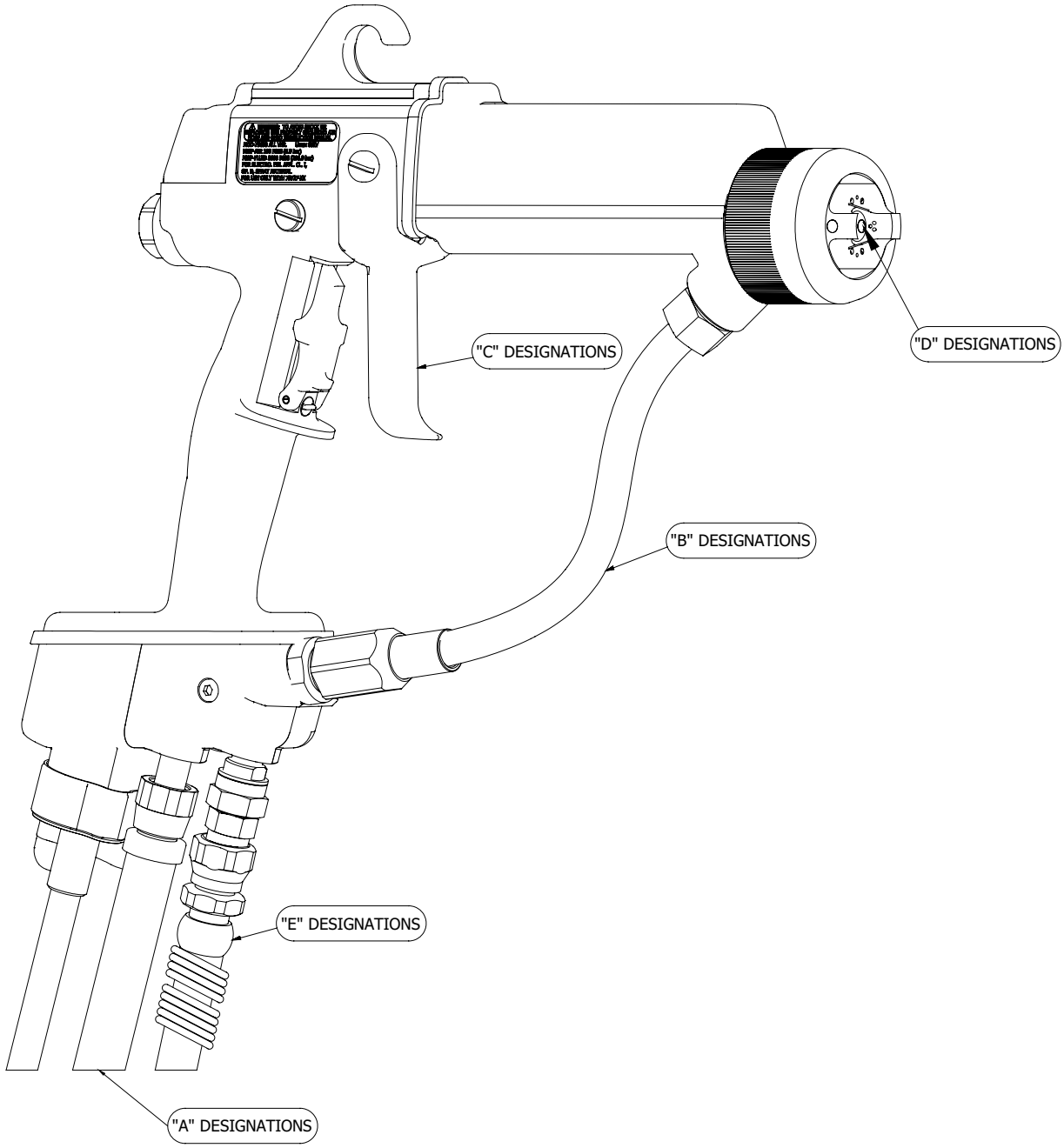

CONFIGURATION DWG. 79926 REV A

VECTOR SOLO RS90-AA SOLVENT BASED

79698 - ABCDE

BASE MODEL NO. — OPTION DESIGNATIONS

(ORDERING INFORMATION ONLY)

OPTION "A" DESIGNATIONS
AIR HOSE TYPE AND LENGTH

1 FOR STANDARD AIR HOSE ASSEMBLY, 10 METER (33')-PART NUMBER: 79727-10
2 FOR STANDARD AIR HOSE ASSEMBLY, 15 METER (49')-PART NUMBER: 79727-15
3 FOR STANDARD AIR HOSE ASSEMBLY, 20 METER (66')-PART NUMBER: 79727-20
4 FOR STANDARD AIR HOSE ASSEMBLY, 30 METER (99')-PART NUMBER: 79727-30
5 FOR QD AIR HOSE ASSEMBLY, 10 METER (33')-PART NUMBER: 79727-11
6 FOR QD AIR HOSE ASSEMBLY, 15 METER (49')-PART NUMBER: 79727-16
7 FOR QD AIR HOSE ASSEMBLY, 20 METER (66')-PART NUMBER: 79727-21
8 FOR QD AIR HOSE ASSEMBLY, 30 METER (99')-PART NUMBER: 79727-31

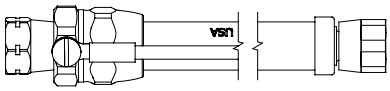

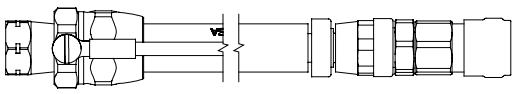

OPTION "B" DESIGNATIONS
FLUID INLET TUBE

0 FOR FLUID INLET TUBE (INCLUDED)-PART NUMBER: 79921-00

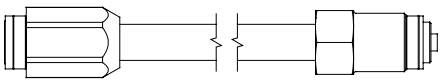

OPTION "C" DESIGNATIONS
TRIGGER TYPE

2 FOR TWO FINGER TRIGGER-PART NUMBER: 79694-00

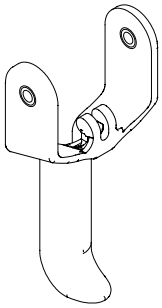

OPTION "D" DESIGNATIONS
SPRAY TIP SIZE

1 FOR 0811 TIP WITHOUT PREORIFICE-PART NUMBER: 79691-0811
2 FOR 0813 TIP WITHOUT PREORIFICE-PART NUMBER: 79691-0813
3 FOR 1011 TIP WITHOUT PREORIFICE-PART NUMBER: 79691-1011
4 FOR 1015 TIP WITHOUT PREORIFICE-PART NUMBER: 79691-1015

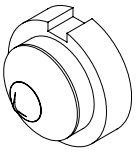

APPROVED SPARE TIP LIST

0509 TIP : 79691-0509, 0511 TIP : 79691-0511, 0513 TIP : 79691-0513
1009 TIP : 79691-1009, 1013 TIP : 79691-1013, 1018 TIP : 79691-1018, 1021 TIP : 79691-1021
1311 TIP : 79691-1311, 1313 TIP : 79691-1313, 1315 TIP : 79691-1315, 1318 TIP : 79691-1318
1511 TIP : 79691-1511, 1513 TIP : 79691-1513, 1515 TIP : 79691-1515, 1518 TIP : 79691-1518, 1521 TIP : 79691-1521,
1715 TIP : 79691-1715

OPTION "E" DESIGNATIONS
FLUID HOSE LENGTH

0 FOR NO FLUID HOSE
1 FOR 11m (36FT) FLUID HOSE-PART NUMBER: 7994-36
2 FOR 15m (50FT) FLUID HOSE-PART NUMBER: 7994-50
3 FOR 25m (75FT) FLUID HOSE-PART NUMBER: 7994-75
4 FOR 30m (100FT) FLUID HOSE-PART NUMBER: 7994-100

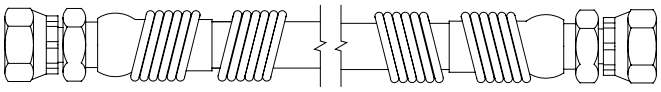

CONFIGURATION DWG. 79926 REV A

INTRODUCTION

GENERAL DESCRIPTION

The **Vector Solo™ AA90 Applicators** are a combined air/airless powered only by a pressurized air source. Pressurized air creates rotation of a turbine generator that powers a cascade. The cascade generates a high voltage DC charge to the electrode creating an electrostatic field between the atomizer and the target. The target is electrically grounded through its support which may be either stationary or moving.

A regulated pressure fluid system delivers coating material to the atomizer. At the time of triggering the applicator, fan and atomization air is introduced, which atomizes the coating material into a spray mist. The atomized spray particles under the influence of the electrostatic field become electrically charged. The charged particles are attracted to, and deposited on, the target object. The forces between the charged particles and the grounded target are sufficient to turn most normal overspray around and deposit it on the back surface of the target. Therefore, a high percentage of the coating is deposited on the target.

One of the many features of the Vector Solo AA90 applicator system is that the electrical energy, which is available from the resistive charging electrode, is limited to the optimum level of safety and efficiency. The system is incapable of releasing sufficient electrical or thermal energy during normal operating conditions to cause ignition of specific hazardous materials in their most easily ignited concentrations in air.

As the applicator electrode approaches ground, applicator circuitry causes the high voltage to approach zero while the current approaches its maximum value.

NOTES

79698 VECTOR SOLO AA90 SPECIFICATIONS

Environmental/Physical

Applicator Length:	269mm (10.6-inches)
Weight:	973 grams (31.0 oz.)
Hose 79727-XX Lengths (Std):	10m, 15m, 20m, and 30m
Atomizer Nozzle Assembly (Std):	79691-XXXX

(See "Nozzle Selection Guide")

Electrical

Operating Voltage:	85kV DC (-) maximum
Current Output:	130 microamperes maximum
Paint Resistance:*	.1 MΩ to ∞

*(Use Model No. 76652, Test Equipment)

Part Sprayability:	Determine sprayability of part to be coated using 76652, Test Equipment

(See current "Paint, HV & SCI Test Equipment" service manual.)

Mechanical

Fluid Flow Capacity:	Variable to 1,500 cc/minute (spray tip dependent)
Wetted Parts:	Stainless, polyethylene, nylon, acetal polymer, tungsten carbide
Operating Pressure	
Fluid:	207 bar (0-3000 psi) Max.
Air:	6.9 bar (0-100 psi) Max.
Ambient Temp.:	40°C to 0°C (104°F to 32°F)
Consumption:	205 SLPM (7.2 SCFM) @ 2.8 bar (40 psig) @ Handle Inlet
Sound Level:	92dB (A) @ 2.8 bar (40 psig) Inlet, 1m from applicator
Vibration Level:	0.065 m/S^2 @ 2.8 bar (40 psig) @ Handle Inlet

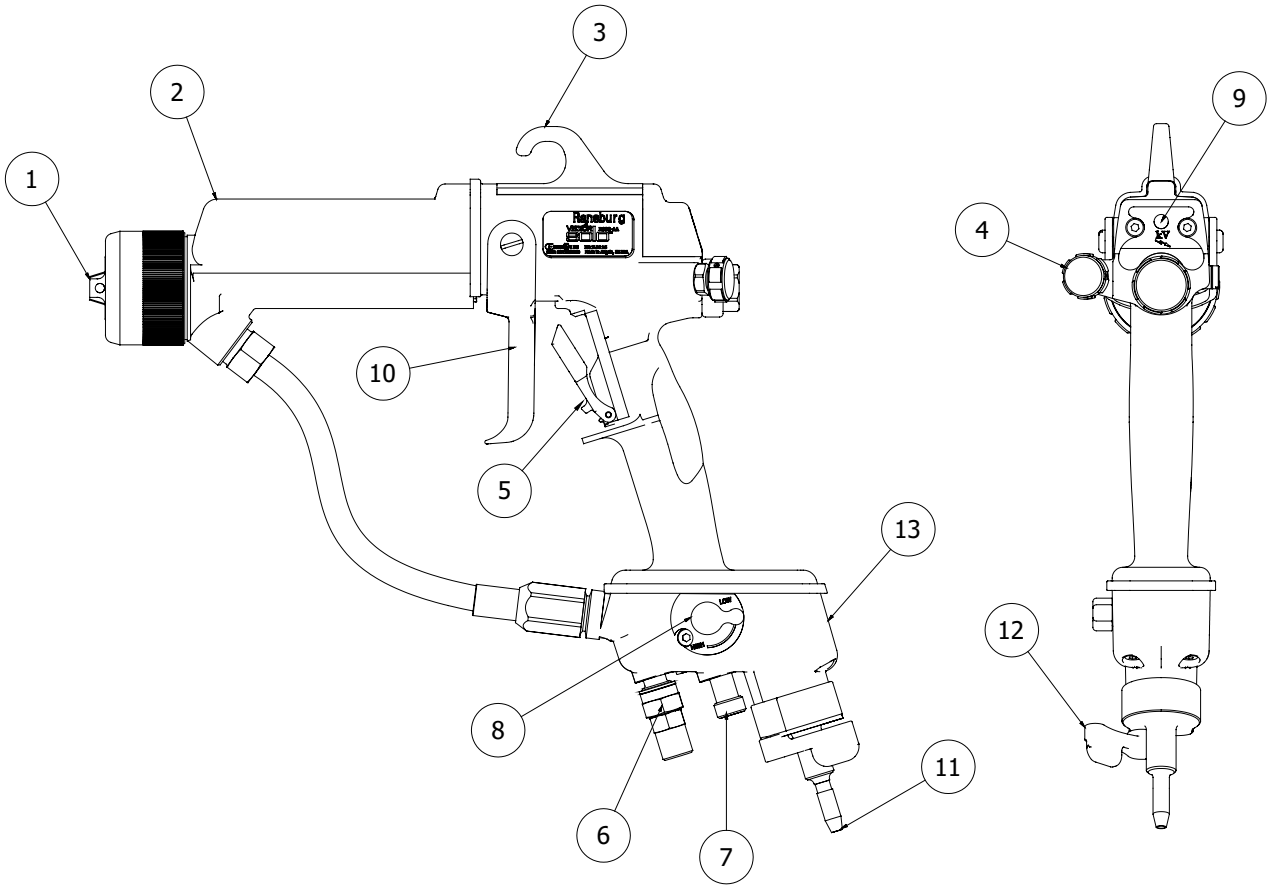

Figure 1: Vector Solo AA90 Solventborne Electrostatic Spray Applicator

VECTOR SOLO AA90 SOLVENTBORNE ELECTROSTATIC SPRAY APPLICATOR			
No.	**Description**	**No.**	**Description**
1	Air Cap / Spray Tip	8	kV Setpoint Switch
2	Barrel	9	Voltage On/Off Indicator Light
3	Replaceable Hook	10	Trigger
4	Fan Air Adjustment	11	Turbine Air Exhaust
5	Trigger Lock	12	Voltage On/Off Lever
6	Fluid Hose Connection	13	Power Module
7	Air Inlet Connection		

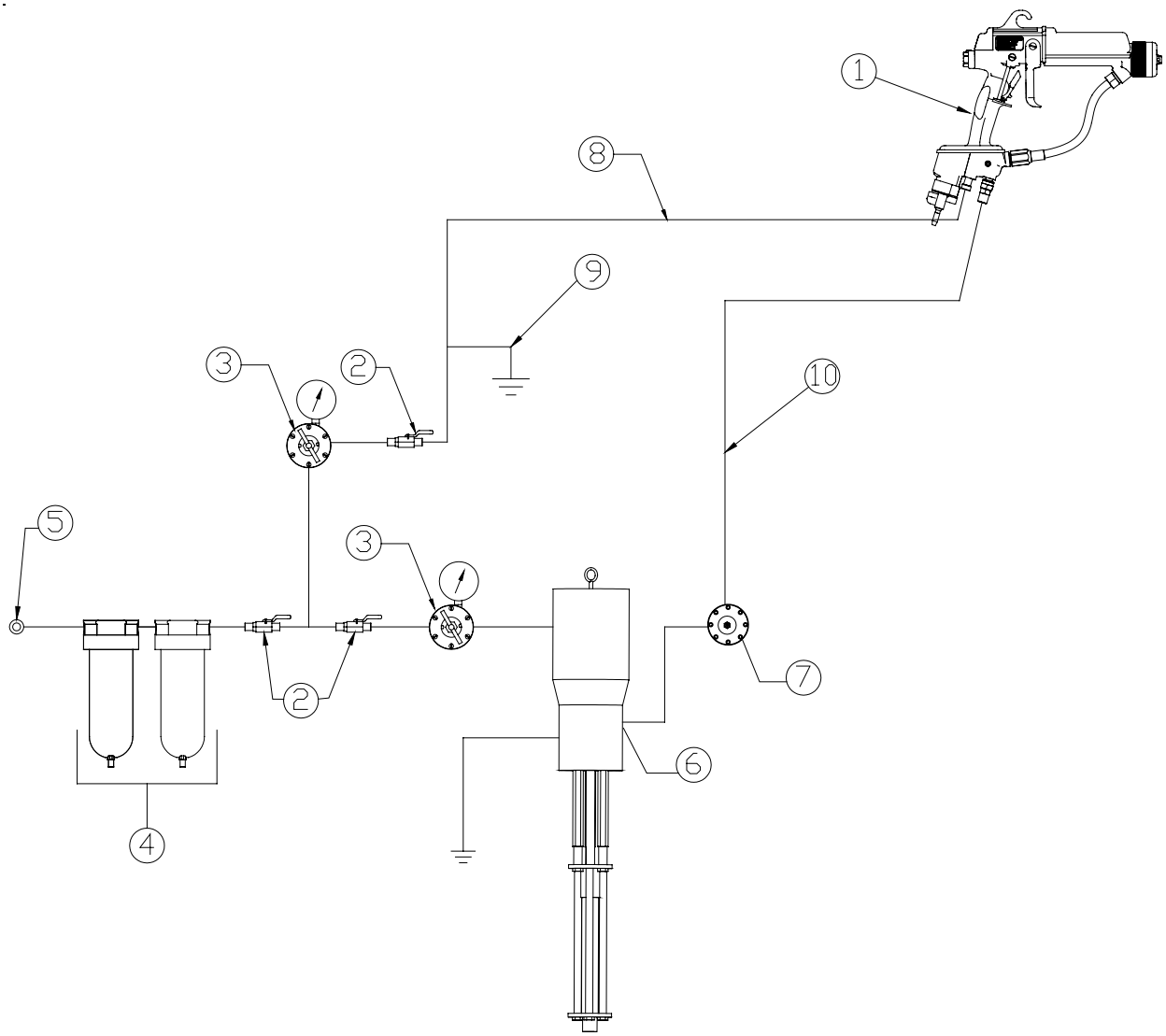

Figure 2: Vector Solo AA90 Typical Solventborne Installation

VECTOR SOLO AA90 TYPICAL SOLVENTBORNE INSTALLATION			
No.	**Description**	**No.**	**Description**
1	Vector Solo Applicator	6	Fluid Supply (Grounded)
2	Ball Valve	7	Fluid Regulator
3	Air Regulator W/Pressure Gauge	8	Air Hose (79727-XX)
4	Air/Water Separator	9	Air Hose Ground Wire
5	Main Air Supply Line	10	Fluid Line

INSTALLATION

Air Hose

For the Vector Solo AA90 to properly function safely, the 79727-XX Air Hose assembly with ground wire is required to be used.

WARNING

➤ For proper safe function of the applicator, the 79727-XX Air Hose must be used either standard or quick disconnect style.

Fluid Hose Recommendation

Ransburg recommends using a 7994-XX Fluid Hose Assembly. This assembly is made to specifically fit the fluid fitting size engineered into the applicator. This hose is available as a standard configuration or as a replacement from your authorized Ransburg distributor.

CAUTION

➤ Any user installed fluid hose used must be rated for 207 bar (3000 psig) working pressure minimum.

Filters

1. Install an air filter assembly on the outlet of the main air regulator. The filter should be 5 micron with a maximum working pressure of at least 100 psig (6.9 bar). Screw the fitting into the filter inlet. The filter MUST be installed with the arrow pointing in the direction of flow. (Refer to the appropriate Filter Assembly manual for Installation Instruc-tions.)

2. Ransburg recommends that a fluid filter be installed at the output of the fluid supply (pump, circulating system, etc.). It is the end user's responsibility to install the proper filter that meets their system's requirements.

79698 SOLO SOLVENTBORNE INSTALLATION

WARNING

➤ The user **MUST** read and be familiar with the "Safety" section of this manual.

➤ This hand held device is intended to be used by trained personnel ONLY.

➤ This manual **MUST** be read and thoroughly understood by **ALL** personnel who operate, clean, or maintain this equipment! Special care should be taken to ensure that the warnings and requirements for operating and servicing safely are followed. The user should be aware of and adhere to **ALL** local building and fire codes and ordinances as well as NFPA, OSHA, and all related country safety codes prior to installing, operating, and/or servicing this equipment.

➤ Personnel **MUST** be **GROUNDED** to prevent a shock or spark during electrostatic operation.

➤ Install and route the hoses so they are **NOT** exposed to temperatures in excess of 49°C (120° F) and so that all hose bends are **NO LESS** than a (6-inch) (15cm) radius. Failure to comply with these parameters could cause equipment malfunction that might create **HAZARDOUS CONDITIONS!**

Interlocks Required

Interlock the solvent supply with the main supply air to the applicator. When solvent is On, main supply air to the applicator is Off. Interlocks are user supplied.

⚠ WARNING

➤ The solvent supply must be interlocked with applicator supply air. Supply air must be off to the applicator when solvent supply is on.

INSTALLATION

1. Ensure there is a true earth ground connection available.

⚠ WARNING

➤ Both the fluid source and the air hose ground must be connected to true earth ground.

2. Connect the fluid source to true earth ground.

3. Ensure electrostatic On/Off lever is in the Off position.

4. Connect the air hose ground wire to true earth ground.

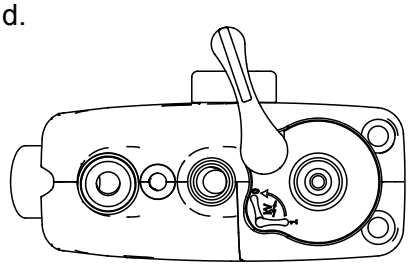

Figure 3: Voltage Off Lever Position (Bottom View)

⚠ WARNING

➤ It is the end users responsibility to insure the ground end of the 79727-XX air hose is connected to true earth ground.

5. Connect the air hose or qd stem to the applicator, **thread is left hand pitch**, counter-clockwise to tighten.

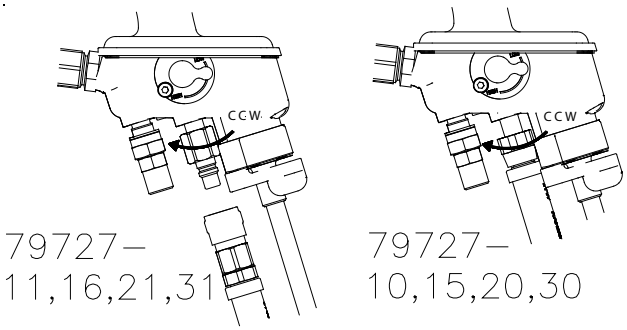

Figure 4: Air Hose Connection

6. Connect fluid hose from grounded fluid source using a mwrench on the flats, tighten fluid hose.

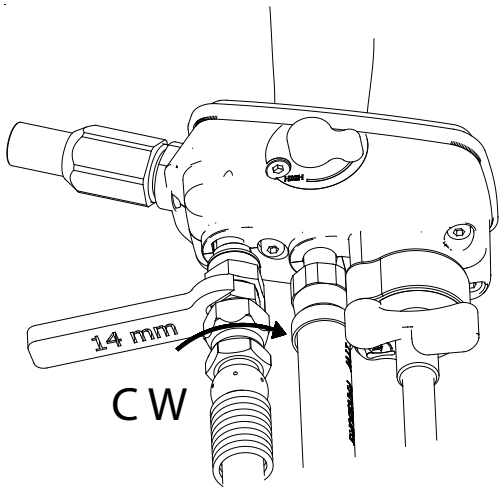

Figure 5: Fluid Hose Connection

7. Trigger the applicator with fluid off. Look for air leaks in any connections.

8. Activate fluid, check for leaks with solvent. Flush if required. (See "Operation" section for sequence.)

OPERATION

SAFE OPERATION

- Ground all operators by requiring that they hold the applicator handle with a bare hand.
- Ground operators and all other persons in spray areas by requiring that they wear conductive soled shoes or grounding straps.
- Have exhaust fans operating while spraying.
- Exhaust fans must be interlocked with the atomization air.
- See that no more than one gallon of solvent per safety container per operator is inside of the hazard location.
- If **ANY** symptom of improper operation occurs, suspend use of the unit until the problem has been diagnosed and corrected. See "Troubleshooting Guide" in the "Maintenance" section or contact your authorized Ransburg representative.
- Ground **MUST** be maintained during the addition of fluid to any supply container! Whenever transferring flammable fluid from one container to another, both containers **MUST** be properly connected to a proven ground first and then to each other. Personnel executing such a transfer **MUST** also be grounded.
- A chemical reaction resulting in the possibility of a pressure **EXPLOSION**, may occur if 1, 1, 1-Trichloroethane, Methylene Chloride, or other Halogenated Hydrocarbon solvents are used in **PRESSURIZABLE FLUID SYSTEMS** having **ALUMINUM** or **GALVANIZED WETTED PARTS**. Such an explosion could cause **DEATH**, serious **BODILY INJURY** and/or substantial property damage. Consult your fluid supplier to determine the chemical content of your solvents. (See "HHC Explosion Hazard Danger Sign" and "Halogenated Hydrocarbon Safety Bulletin".)
- Never flush the applicator with solvent while electrostatics are on. Failure to turn off electrostatics while flushing may cause an **IGNITION HAZARD.** Applicator supply air must be interlocked with solvent supply.

1. Ensure the On/Off switch is in the desired position for voltage.

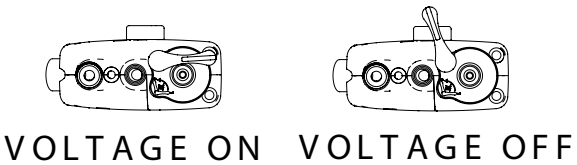

Figure 6: Voltage On/Off Position

2. Ensure the voltage high/low switch is in the desired position.

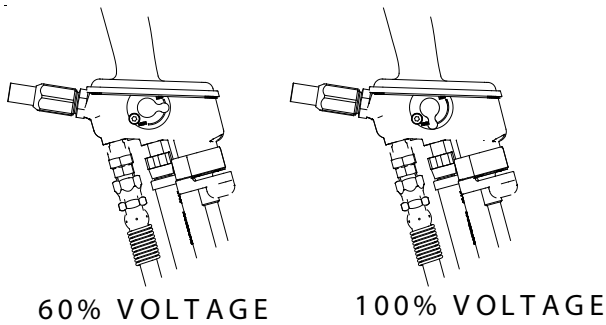

Figure 7: High/Low Voltage Selection

3. Open the fluid supply - 207 bar (3000 psig) maximum working pressure.

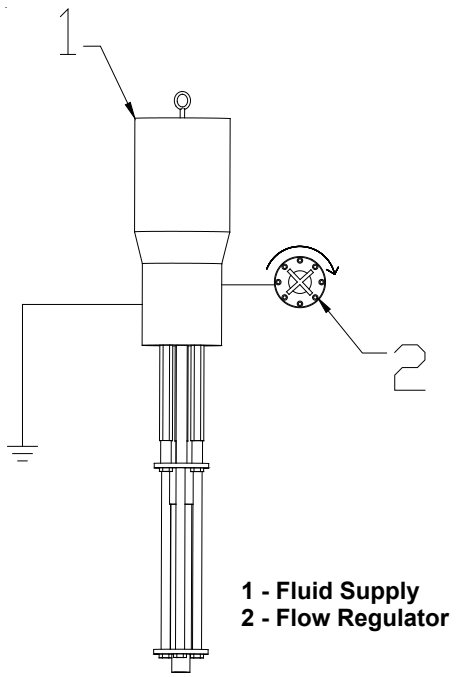

Figure 8: Fluid Supply Pressure Adjustment

4. Increase air pressure to the applicator depending upon amount of air required to eliminate the tails. Minimum pressure is 2.75 bar (40 psig) at the handle. Use either gauge from Maintenance and Test Kit or use Table I to use a gauge reading at the wall regulator adjusted for the pressure drop in the air hose.

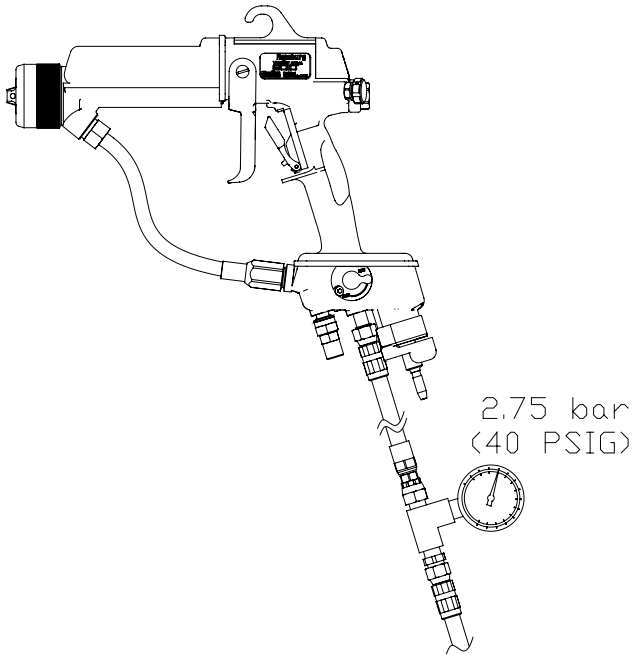

Figure 9: Air Pressure at Regulator

TABLE I - PRESSURE AT REGULATOR	
79727 Hose Length	**Pressure At Wall Regulator Gauge**
30m	3.8 bar (55 psig)
20m	3.5 bar (50 psig)
15m	3.3 bar (48 psig)
10m	3.1 bar (45 psig)

5. Adjust fan pattern size. Counter-clockwise decreases fan, clockwise increases fan pressure. Full closed fan produces the lasgest pattern. Full open fan produces the smallest fan pattern size.

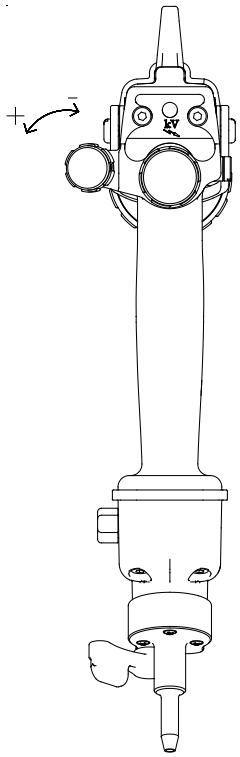

Figure 10: Fan Pattern Size Adjustment

6. The AA90 Applicator incorporates a new feature, that being a locating air cap. (Refer to Figure 11 for a view showing the locating pin.) This feature gives the capability to spray with a fan pattern in either horizontal or vertical positions.

7. Table I shows the available tip sizes. Table II shows the available pre-orifice sizes. The pre-orifice selected should be sized approximately .025mm (.001-inch) at 65 bar (1000 psig) pressure flowing larger then the tip size opening. The pre-orifice use can significantly increase useful spray life of the tip.

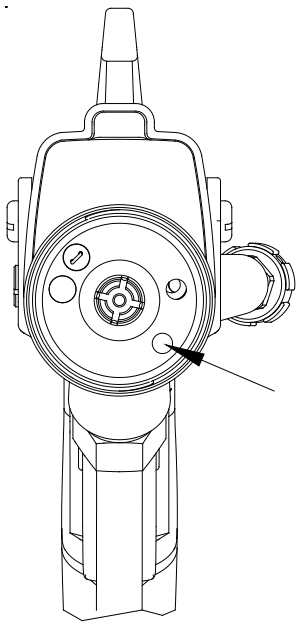

Figure 11: Air Cap Alignment Locating Pin Position

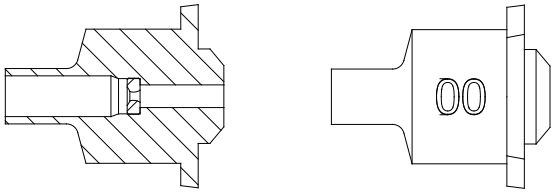

Figure 12: Pre-Orifice Seal Sizes Dash Number Location

TABLE I
NOZZLE SELECTION GUIDE

Nozzle Identification	Operating Parameters	
AA90 Fluid Nozzle Part #	**Nozzle Orifice Size in Inches (mm)**	**Pattern Width at 10-in. (mm)**
79691-0509	.009 (.23)	5-in (127)
79691-0511	.011 (.28)	
79691-0513	.013 (.33)	
79691-0811	.011 (.28)	8-in. (203)
79691-0813	.013 (.33)	
79691-1009	.009 (.23)	10-in. (254)
79691-1011	.011 (.28)	
79691-1013	.013 (.33)	
79691-1015	.015 (.38)	
79691-1018	.018 (.46)	
79691-1021	.021 (.53)	
79691-1311	.011 (.28)	13-in. (330)
79691-1313	.013 (.33)	
79691-1315	.015 (.38)	
79691-1318	.018 (.46)	
79691-1511	.011 (.28)	15-in. (381)
79691-1513	.013 (.33)	
79691-1515	.015 (.38)	
79691-1518	.018 (.46)	
79691-1521	.021 (.53)	
79691-1715	.015 (.38)	17-in. (432)

The first two digits of the nozzle dash number indicate the spray pattern width in inches at a distance of 10- inches (254mm) from the target. The second two digits indicate the orifice size in thousandths of inches.

For example: 79691-1015 has a 10-inches (254mm) spray pattern width and an orifice size of 0.015-inches (.38mm).

TABLE II - 79692-XX PRE-ORIFICE SEAL SIZES		
Part #	**Matching Spray Tip Part #**	**Restrictor Orifice Size**
79692-01	79691-0509,-1009	.1010" (.256mm)
79692-02	79691-0511, -0811, -1011, -1311, -1511	.1021" (.307mm)
79692-03	79691-0513, -0813, -1013, -1313, -1513	.0141" (.358mm)
79692-04	79691-1015, -1315, -1515, -1715	.0161" (.409mm)
79692-06	79691-1018, -1318, -1518	.0201" (.511mm)
79692-07	79691-1021, -1521	.0221" (.561mm)

8. The applicator is shipped standard with a plug in the atomization air port. If lower atomization air pressures are desired, a compensation valve is included with each applicator and can be used instead of the plug. The compensation valve (included seperate with applicator) reduces the atomization air pressure approximately 0.2 bar (3 psig) per clockwise turn from the wide open position. To determine what pressure the applicator is set at, use the Air Cap Test Kit in the "Parts Identification - Accessories" section.

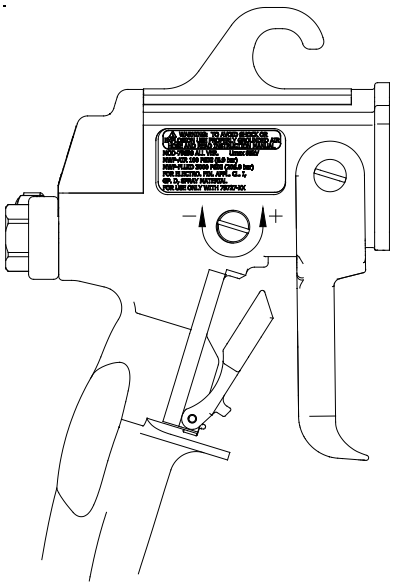

Figure 13: Compensation Valve - Full Open Position

FLUSHING / COLOR CHANGE PROCEDURE

1. Turn electrostatic lever to Off position.

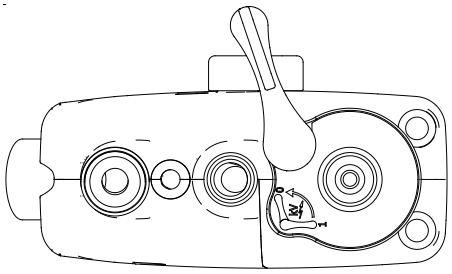

Figure 14: Electrostatics Lever Off Position

2. Turn off supply air.

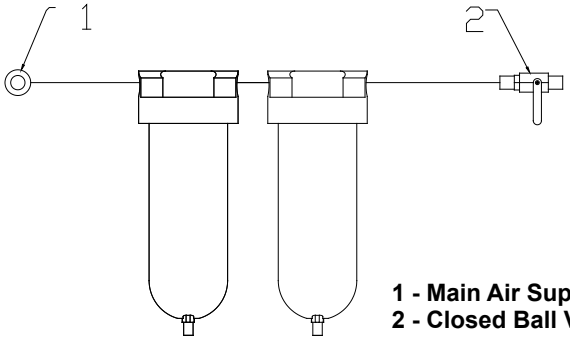

1 - Main Air Supply
2 - Closed Ball Valve

Figure 15: Applicator Supply Air - Off

⚠ WARNING

➤ Supply air to the applicator must be interlocked with the solvent supply. Supply air must be off to the applicator when solvent supply is on.

3. Relieve any fluid pressure, then discharge fluid into appropriate grounded metallic container.

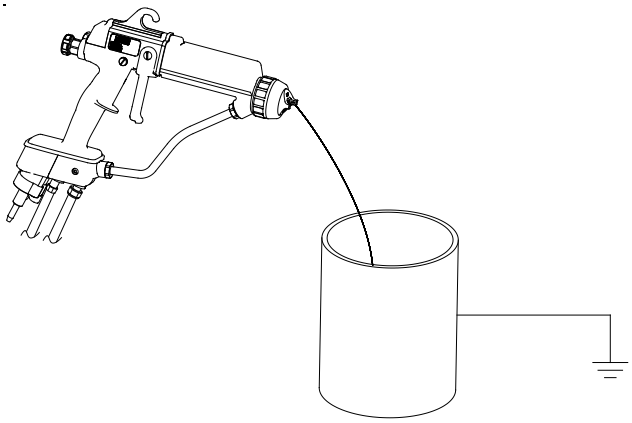

Figure 16: Applicator Flush Out

4. Load next color or remove applicator from installation as required.

THE RIGHT TECHNIQUE

Following are some basic electrostatic spray techniques. Depending on the spray target, it may be necessary to adjust the technique.

Spray Width Determination

The size of the object being coated is the determining factor in adjusting the spray pattern. The larger the object, the larger the required pattern width. This is accomplished by fluid nozzle selection. Air adjustment is used to remove "tails" from the spray pattern and adjust the pattern size.

NOTE

➤ The degree of atomization is dependent on the viscosity of the paint formulation, the applied fluid pressure, and nozzle selection.

Applicator to Target Distance

The distance between the applicator and the target influences the appearance of the final finish of the object. If the applicator is held too close, under 100mm (approximately 4-inches), runs and sags with excessive "bounce-back" may occur. If the applicator is held too far from the object, the electrostatic attraction is decreased. Normally, the best spacing between applicator and target is in the 150mm to 300mm area (6-inch to 12-inch).

⚠ CAUTION

➤ The object being coated is maintained at ground potential. The applicator operator is also grounded, therefore, the operator has as much attraction for the electrostatic paint as the object. To prevent "wrap-back" always keep the applicator nozzle closer to the target than to the operator.

Overlap

For the best "hiding" and uniformity of film thickness, the stroke overlap should be approximately 50%. There should be some overlap at edges of the part to increase edge coverage. Overlap requirements may vary widely with different paint formulations and different compositions of objects being coated.

Triggering

Applicator triggering (ON/OFF) depends largely on the desired results (the amount of wrap-around required, edge coating, etc.). If the front and back of the object are being coated, proper applicator technique can edge coat in some instances without making a specific pass for that purpose. Triggering the applicator before the target is directly in front of the applicator may cause heavy edge build-up on the leading edge of the target due to the electrostatic attraction.

PREPARATION

Paint

A selection of the proper paint mixture is essential to electrostatic operation. Paint test equipment may be obtained through your Ransburg representative. For further paint formulation and test procedures, consult your Ransburg representative and/or your paint supplier.

Fluid Nozzle

Because of the design of the AA90 applicators, the fluid nozzle precision is paramount to proper function. Ransburg makes every effort to assure that all production of this part will meet the critical design standards necessary for all applications.

The selection of the best nozzle to apply a given coating to a specific article with maximum efficiency is not an exact science. Testing is usually necessary and wide experience with many types of coating applications helps. Your Ransburg representative uses such experience and actual laboratory testing when recommending a nozzle for your application needs.

However, if parts, paints, or conveyor speeds are changed, a different nozzle may be required for best results. The following discussion and guide will assist the user in making their own nozzle selection whenever it becomes necessary. Selection should always be verified by actual tests to determine optimum efficiencies.

Refer to "Nozzle Selction Guide" in this section for the choice of spray width and spray characteristics appropriate to the size and type of target. The maximum nozzle flow capacity depends on the orifice size, the fluid pressure, the paint viscosity, and the spraying temperature. Always remember, for maximum paint economy any nozzle selected should always be operated at the lowest fluid pressure, which will give good atomization and the required flow rate.

⚠ CAUTION

➤ Ransburg recommends the use of a fluid filter in addition to the filter in the applicator fluid line to reduce nozzle clogging.

MAINTENANCE

SUITABLE SOLVENTS FOR CLEANING VECTOR SOLO APPLICATORS

When cleaning the applicator, a suitable solvent for cleaning depends on the part(s) of the applicator to be cleaned and the material that needs to be removed. Ransburg recommends that all exterior cleaning be done with non-polar solvents to prevent a conductive residue on critical components. We also understand that some of these solvents do not always meet the cleaning needs of some materials. If conductive polar solvents are used to clean the applicator components, all residue must be removed using a non-conductive non-polar solvent (i.e. high flash Naphtha). If there are any questions as to what solvents are best for cleaning , contact your local Ransburg distributor and/or your paint supplier.

The Vector applicator, air hoses, and fluid hose assemblies should not be submerged or soaked in solvent. However, the outer surfaces of these items can be wiped with a suitable cleaning solvent. The items that cannot be soaked are noted throughout this manual. All electrical components **cannot** be cleaned or soaked in any solvents.

NOTE

➤ Use a non-polar solvent wipe as the final cleaning sequence for cleaning all parts.

⚠ WARNING

➤ The user **MUST** read and be familiar with the safety instructions in this manual.

➤ If compressed air is used in cleaning, **REMEMBER** that high pressure air can be dangerous and should **NEVER** be used against the body**.** It can blind, deafen, and may even penetrate the skin. If used for cleaning equipment, the user should wear safety glasses.

➤ **ALWAYS** turn the on/off lever on the power module off prior to cleaning and servicing the equipment.

➤ Be **SURE** the power is **Off** and the system is grounded before using solvent to clean **ANY** equipment.

➤ **DO NOT** operate a faulty applicator!

➤ When using cleaning solvent, standard health and safety precautions should apply.

➤ Any solvent used to clean the fluid passages must be discharged into a grounded container. Use of ungrounded or plastic containers may cause fire or explosion.

➤ Cleaning of the exterior surface of the applicator should be done with non-polar solvents. If cleaning requires the use of polar solvents, the applicator should be wiped down with non-polar solvent prior to going back into use. Using polar solvents will leave a semi-conductive film on the surface of the applicator that will effect efficiency of the applicator and cause damage to the components.

ROUTINE SCHEDULE

Follow these maintenance steps to extend the life of the applicator and ensure efficient operation:

Several Times Daily

- Inspect the air cap for paint accumulation. Clean as frequently as necessary with a soft bristled brush and a suitable solvent.

⚠ CAUTION

➤ **NEVER** remove the fluid nozzle assembly while paint is in the applicator or paint may enter into the air passages. Clogged or restricted air passages will cause poor atomization and/or electrical shorting. Air passages that are clogged with conductive material can lead to excessive current output levels and consequent low operating voltage or long-term electrical damage. Before undertaking any atomizer maintenance procedure.

The applicator barrel **MUST** be tilted front down to remove the fluid nozzle. Failure to do so may allow paint to enter the air passages, thereby reducing airflow and damaging the applicator barrel/cascade. Applicators may be flushed in lieu of tilting. However, they must be either flushed or tilted down during nozzle removal!

- Clean all insulating surfaces in the system. Remove paint accumulation from the exterior of the applicator with a solvent dampened cloth.

⚠ CAUTION

➤ **NEVER** soak or submerge the electrical components of the applicator, i.e., barrel, power module, or handle. Damage and failure may occur.

Daily (or at start of each shift)

- Verify that ALL solvent safety containers are grounded!
- Check within 6m (20-ft.) of the point of operation (of the applicator) and remove or ground ALL loose or ungrounded objects.
- Inspect work holders for accumulated coating materials (and remove such accumulations).
- Check that atomizer assembly is clean and undamaged.

NOTE

➤ Standard electrode is "snap back" spray wire electrode.

- Straighten the applicator electrode if necessary.
- Clean the fluid filter, if used.

Electrical Output Test

1. Turn the paint and/or solvent supply OFF.

⚠ WARNING

➤ Paint and/or solvent supply must be turned off during this test-risk of fire or explosion.

2. Flush the applicator (see "Flushing Procedure" in the "Operation" section).

3. Follow instructions for use of the 76634-00 meter.

4. Using the meter set to kV, measure the output voltage of the applicator. Voltage output reading is between 67 and 75kV.

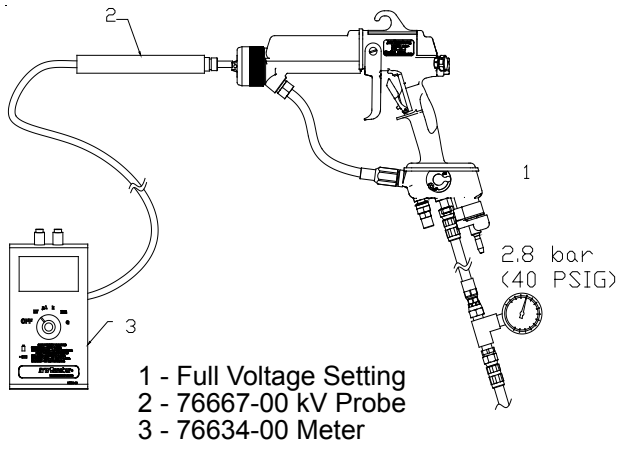

Figure 17: kV Probe

5. See "Troubleshooting" in the "Maintenance" section for possible cause of poor performance.

NOTE

➤ There is a 10 giga ohm resistor in the probe that lowers the output voltage. The maximum kV rating is at no load. Paint overspray and other contaminates on the barrel will lower the kV probe reading.

APPLICATOR REPAIR

⚠ CAUTION

➤ **DO NOT** allow the fluid lines to stand empty without flushing first! This will cause dried paint flaking and clogging of the fluid lines, applicator passages, and/or nozzles.

All repairs should be made on a clean, flat surface. If a vise is used to hold parts during service or repair, DO NOT clamp onto plastic parts and always pad the vise jaws!

The following parts should be thoroughly packed with dielectric grease (LSCH0009-00) leaving **NO** air space or voids when assembling:

- All O-Rings (Teflon o-rings do not need lubrication)
- Needle Shaft Assembly
- Packing Tube
- Cascade and Barrel

Equipment Required

- Special Multi-Purpose Wrench (79854-00) *
- 4mm, 3mm, and 2.5mm Allen Wrenches *
- Screwdriver (blade)
- Jam Nut Removal Tool (79793-00) *
- Dielectric Grease (LSCH0009-00) *
- Sealant, Medium Strength (7969-10)
- Dowel, 6mm (1/4") diameter
- Air Cap Removal Tool (79642-00) *
- 2.5mm Wrenches (two) (74133-00) *
- Nozzle Wrench (76428-00) *

Note: *Supplied with applicator

FLUSHING PROCEDURES

The fluid system should be thoroughly cleaned by flushing with a clean compatible solvent whenever a color change is made, or when the applicator will not be used for an extended period.

1. Turn OFF the control unit/power supply power.

2. Turn the paint supply OFF.

3. Turn the shaping air supply OFF. Bleed all air from the line.

4. Tilt the applicator down and trigger until it is clear of paint.

5. Set the trigger stop lever and remove the nozzle nut, air nozzle, and fluid nozzle.

6. Connect the solvent supply.

7. Release the trigger stop and run solvent through the system until it runs clear.

8. Disconnect the solvent supply.

9. Trigger the applicator until it is clear of solvent. After the preceding steps are complete, the applicator is ready for color change, storage, or maintenance.

NOTE

➤ If production downtime is to be short, the fluid lines may not require flushing (depending on the coating material being used). If the solids in the coating settle slowly, the lines will not need to be flushed as soon after shutdown as with fast settling solids. The paint being used and the length of downtime will determine the need for flushing. Metallic paint and primer will require flushing sooner than other types of coating material.

⚠ CAUTION

➤ If the coating material is fast settling and the fluid lines are not flushed soon enough, the internal passages may become clogged. This can lead to excessive downtime for repair.

Weekly

- Check the entire system for damage, leaks, and paint accumulation.
- Clean the atomizer assembly.

APPLICATOR ASSEMBLY CLEANING PROCEDURE

Routine Cleaning Equipment Needed

- An appropriate solvent
- Solvent safety container (grounded)
- Small soft-bristled brush

For efficient electrostatic operation, keep the applicator's exterior and low voltage/high voltage cable free of paint accumulation. This prevents the loss of voltage to ground with a resultant reduction in transfer efficiency.

⚠ CAUTION

➤ Before cleaning the nozzle assembly, turn the control unit or power supply **OFF** and flush the fluid line with a compatible solvent until clean. Turn the paint and air supplies **OFF**. Trigger the applicator to relieve both fluid and air pressures.

⚠ WARNING

➤ Ensure supply pressures have been bled to zero prior to servicing the applicator. Failure to do so may cause personal injury.

➤ If the fluid nozzle is completely clogged, triggering the applicator will not release the pressure. Cover the end of the applicator with a heavy rag and loosen the nozzle nut slowly into a grounded catch container.

➤ Any broken or damaged components should be replaced. Any damage to the applicator may result in **UNSAFE** operating conditions.

1. Turn the paint and air supplies OFF. Relieve both fluid and air pressures. Set the trigger stop lever.

2. Unscrew the air cap retaining ring completely from the barrel.

3. With the front of the barrel tilted downward, remove the air cap and fluid nozzles.

4. Clean all parts in a suitable solvent and examine for wear and damage. To clear the fluid nozzle orifice, blow compressed air through the tip in the opposite direction of flow. Soaking in solvent and/or brushing may also be necessary to clean the orifice. Replace as necessary.

5. Clean all exterior surfaces of the applicator with a rag and a suitable solvent.

6. Assemble the parts in reverse order of disassembly.

⚠ CAUTION

➤ A wire brush or metal tools must **NEVER** be used. **NEVER** use a cleaning tool that is harder than the plastic parts. If a deposit cannot be removed with solvent and a rag or the soft brush, soak the part in solvent **ONLY** until the deposit can be removed! **NEVER** soak the applicator body, barrel, or hook transformer!

⚠ WARNING

➤ **NEVER** wrap the applicator, associated valves and tubing, and supporting hardware in plastic to keep it clean. A surface charge may build up on the plastic surface and discharge to the nearest grounded object. Efficiency of the applicator will also be reduced and damage or failure of the applicator components may occur. **WRAPPING THE APPLICATOR IN PLASTIC WILL VOID WARRANTY**.

1. Remove applicator from the worksite after following the "Flush Procedure".

⚠ WARNING

➤ Ensure all pressure have been bled from the fluid and air line prior to disconnection.

2. Remove fluid hose at base of applicator.

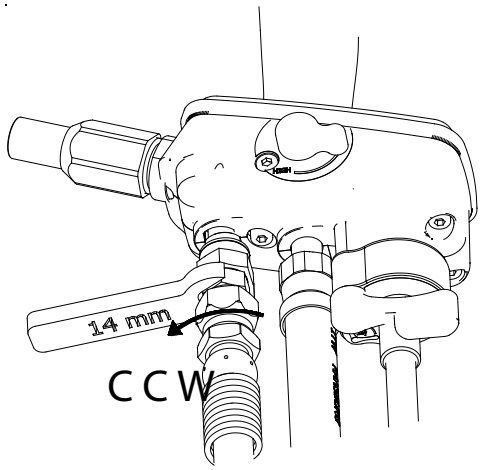

Figure 18: Counter-Clockwise to Remove Fluid Hose

3. Remove air hose at base of applicator.

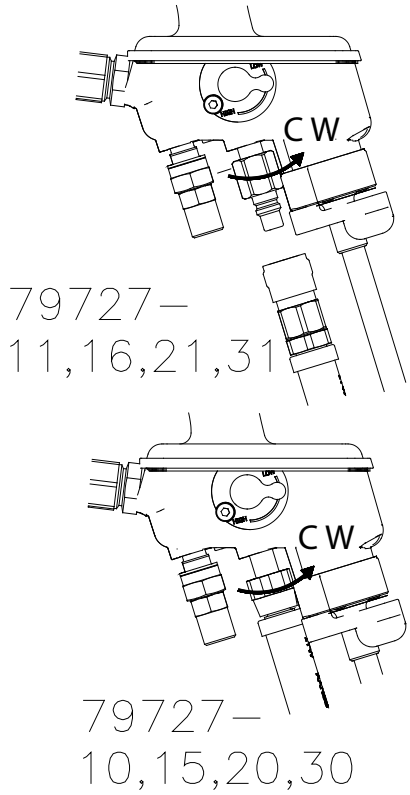

Figure 19: Clockwise to Remove QD Stem/Air Hose

Spray Tip Removal/Carbide Removal

1. Remove the retaining nut completely by hand.

2. Remove the air cap from applicator by grabbing the horns pushing side to side while pulling the cap away from the applictor.

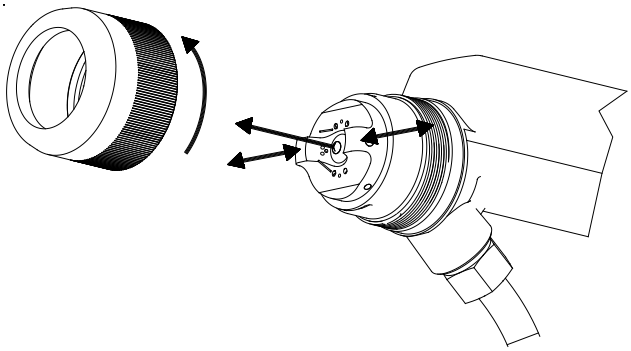

Figure 20: Spray Tip Removal/Carbide Removal

3. Push the spray tip and holder out of the air cap by pressing with a finger or soft object on the carbide or tapered portion of spray tip. The carbide spray tip contains a removable nozzle seal with or without a pre-orifice. The pre-orifice seal is black, the standard seal is white. To remove the sealfrom the tip holder, hold the end of the tip and the end of the seal and snap apart the two pieces.

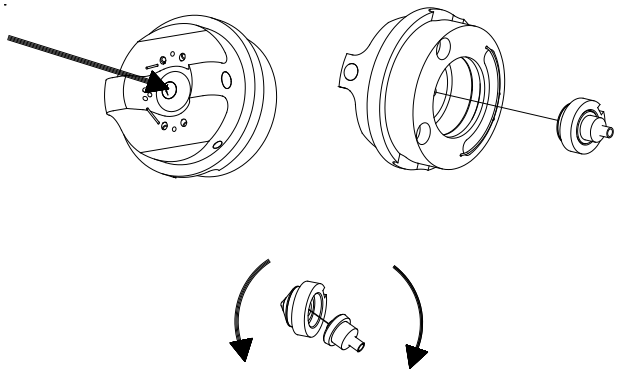

Figure 21: Spray Tip and Seal Removal

4. By hand push the seal into the tip holder as shown. The seal will be held in place in the holder. Then place the tip holder on the insertion tool. Hold the tip upright, align the pin in the cap to the slot in the tip holder and push together. The tip should snap in place in the air cap.

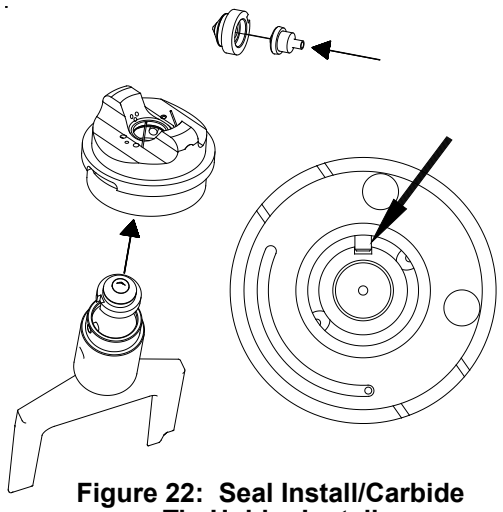

Figure 22: Seal Install/Carbide Tip Holder Install

BARREL REMOVAL

1. Remove air cap and fluid nozzle.

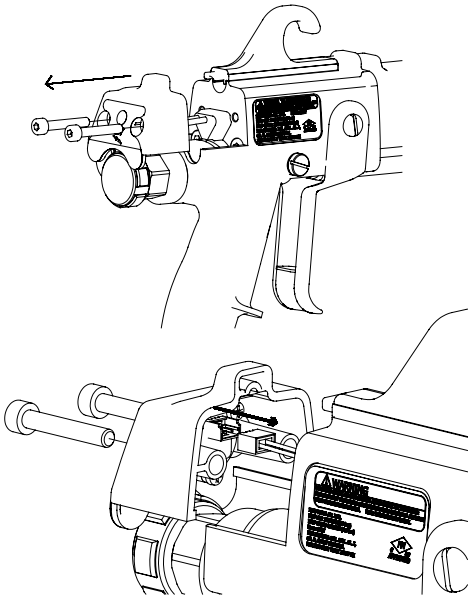

Figure 23: Rear Cover Removal

2. Remove two (2) screws with a 3mm Allen wrench that hold the rear cover. Remove rear cover and disconnect the connector.

3. Remove the rear fluid adjustment bushing and air valve and fluid needle return springs.

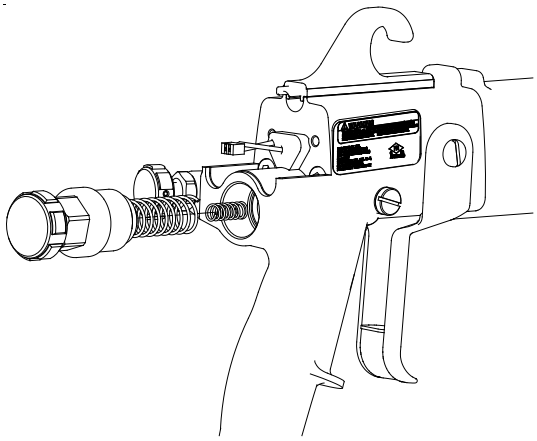

Figure 24: Fluid Adjust Bushing Removal

4. Remove the trigger and fluid line.

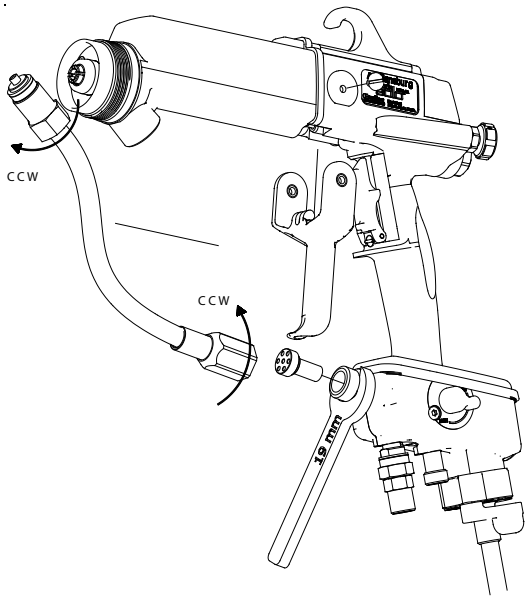

Figure 25: Fluid Line/Trigger Removal

5. Remove the two (2) jam nuts using the 79793-00 Removal Tool while holding the needle shaft with the 79793-00 Special Wrench.

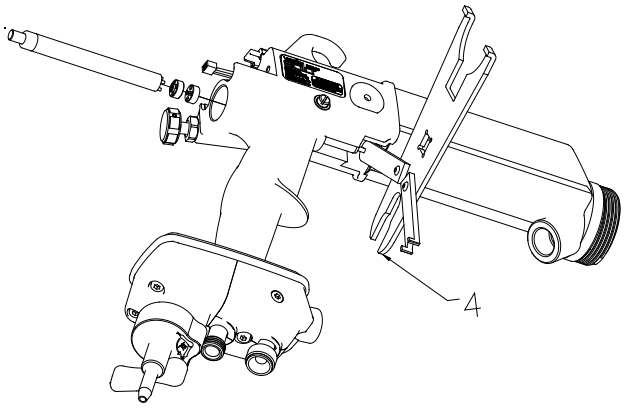

Figure 26: Jam Nut Removal

6. Remove three (3) 5mm screws using a 4mm Allen wrench. Remove the hook.

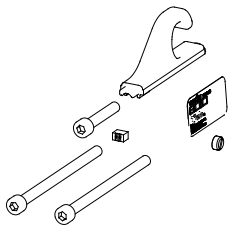

Figure 27: Barrel Screw Removal

7. Pull the barrel straight away from the handle.

Figure 28: Barrel Removal

8. Using 79676 wrench, remove nozzle and gasket. When removing, be sure to keep the drive teeth of the tool engaged in the slots of the nozzle.

Figure 29: Fluid Nozzle and Gasket Removal

Remove Cascade

1. Pull the cascade out of the barrel.

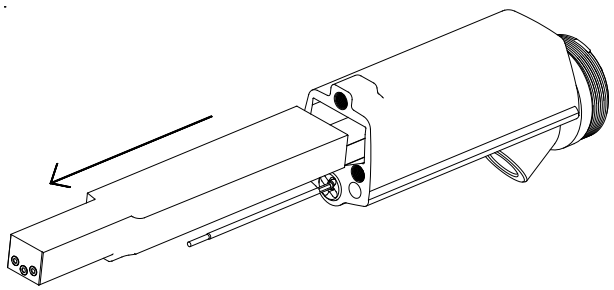

Figure 30: Cascade Removal

2. Wipe off excess dielectric lubricant.

3. Remove excess lubricant from inside barrel with a clean cloth or rag.

Replace Cascade

1. Dispense about 1/4 tube of LSCH0009-00 inside the barrel and on the sides of the cascade.

⚠ CAUTION

➤ Failure to use the LSCH0009-00 may shorten product life.

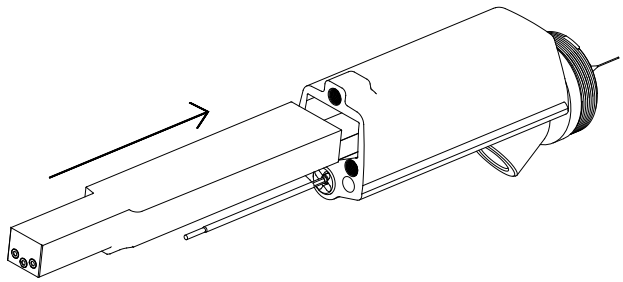

Figure 31: Cascade Replacement

2. Slide the cascade back into the barrel.

Reinstalling Barrel

1. Replace the hook. Install the barrel against the handle and hand tighten two (2) long 5mm screws, in an alternating sequence with the 4mm Allen wrench. Tighten the hook screw with the same 4mm wrench.

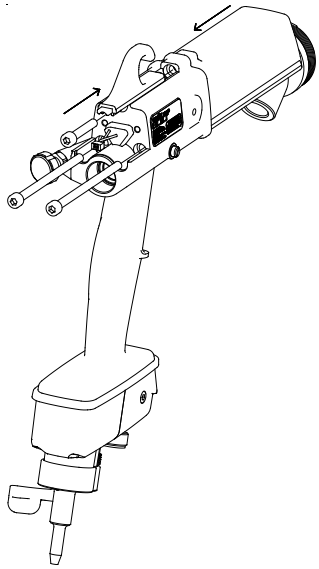

Figure 32: Installing Barrel to Handle

2. Install the first jam nut. Tighten to stop by hand while holding the needle shaft.

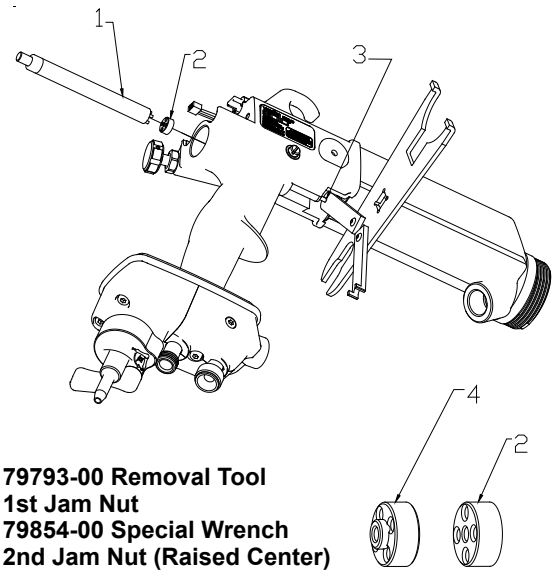

1 - 79793-00 Removal Tool
2 - 1st Jam Nut
3 - 79854-00 Special Wrench
4 - 2nd Jam Nut (Raised Center)

Figure 33: First Jam Nut Replacement

3. Tighten second jam nut with raised center facing out, while holding the needle shaft.

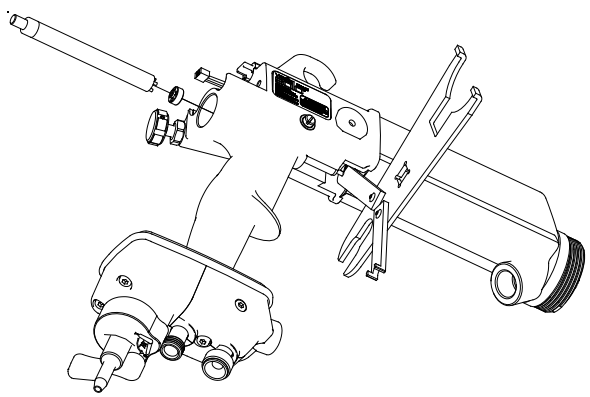

Figure 34: Second Jam Nut Replacement

4. Install the fluid adjustment assembly along with the air and fluid return springs.

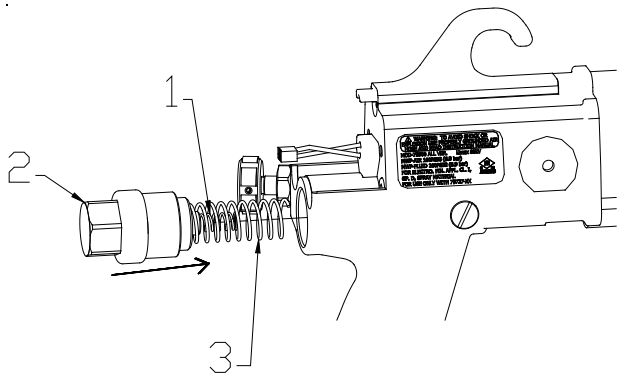

1 - Fluid Return Spring
2 - Air Valve Knob
3 - Air Valve Return Spring

Figure 35: Spring and Fluid Adjust Valve Replacement

5. Install trigger and fluid line.

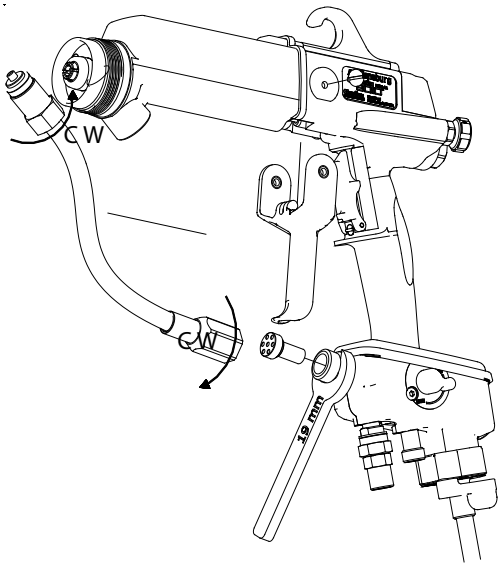

Figure 36: Fluid Line/Trigger Installation

6. Reconnect the rear cover and install with two (2) 4mm screws.

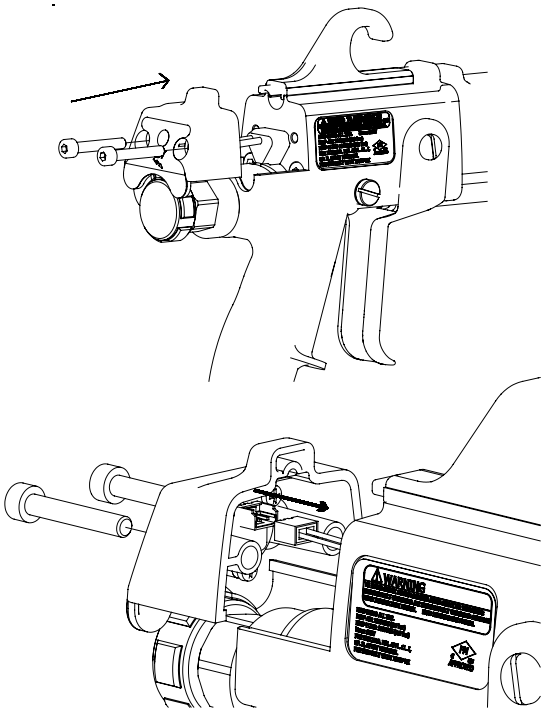

Figure 37: Rear Cover Replacement

NEEDLE SHAFT REMOVAL/REPLACMENT

1. Remove barrel from the handle using previous steps.

2. Remove cascade.

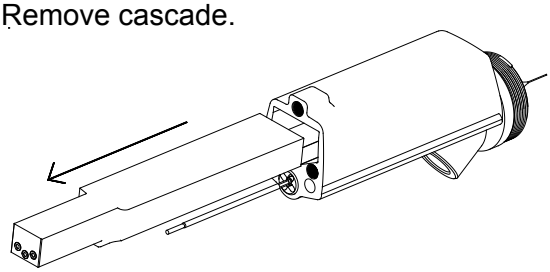

Figure 38: Cascade Removal

3. Remove rear nut using the 79854-00 Special Wrench.

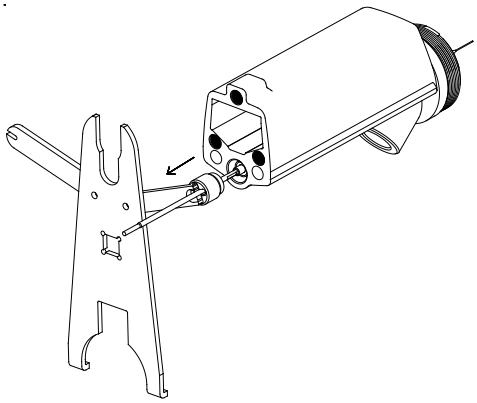

Figure 39: Needle Shaft Removal

4. Attach a jam nut to the assembly and pull straight out of the barrel.

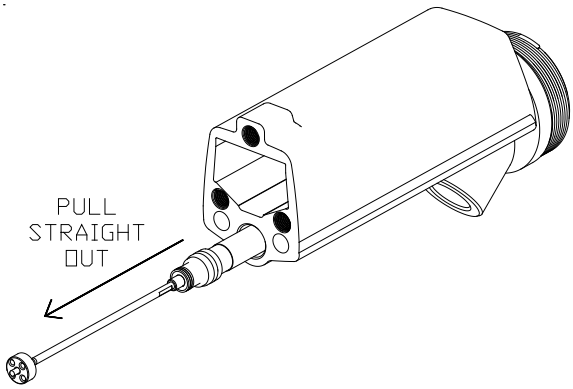

Figure 40: Needle Shaft Removal

5. Clean cavity with non-metallic brush and non-polar solvent.

6. Replace needle components as required. (See "Needle Shaft Parts List" in the "Parts Identification" section for breakdown.)

Needle Shaft Packing Replacement

1. Pull all rear seal parts off shaft. Replace components as required.

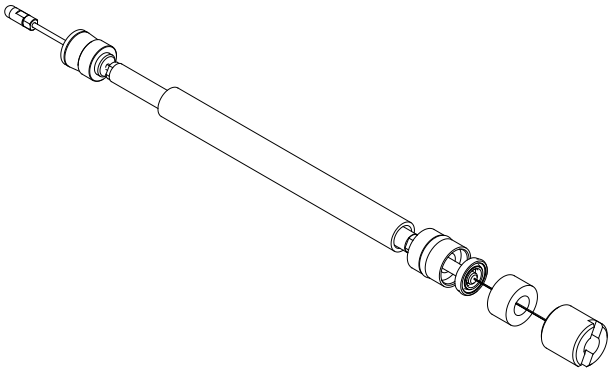

Figure 41: Needle Shaft Packing Replacement

2. Using two (2)74133 tools, remove carbide ball and jam nut. Remove packing components.

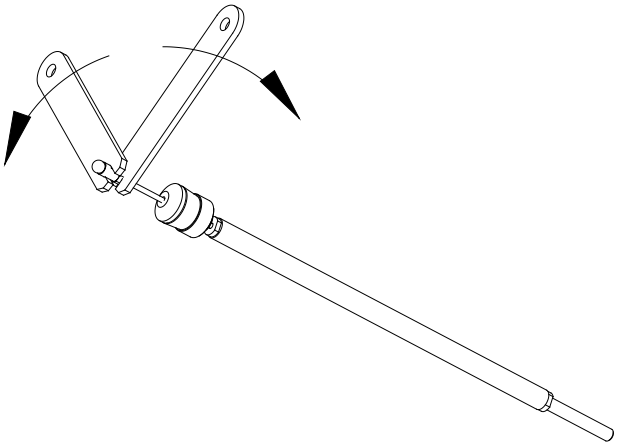

Figure 42: Needle Shaft Packing Replacement

3. Remove front spreader seal, front u-cup seal, rear spreader seal, rear u-cup seal, and pusher seal.

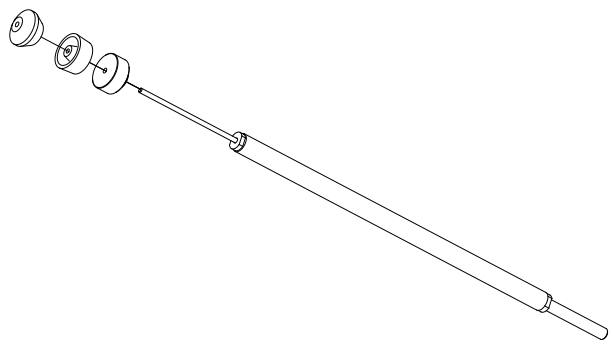

Figure 43: Needle Shaft Packing Replacement

Needle Shaft Pack Reassembly

1. Install pusher seal, rear u-cup, rear spreader seal, front u-cup seal, front spreader seal as shown. Orient seals per Figures 41 and 43.

2. Install jam nut all the way on the shaft. Install the carbide ball all the way down using two 74133 tools. Tighten the jam nut against the carbide ball.

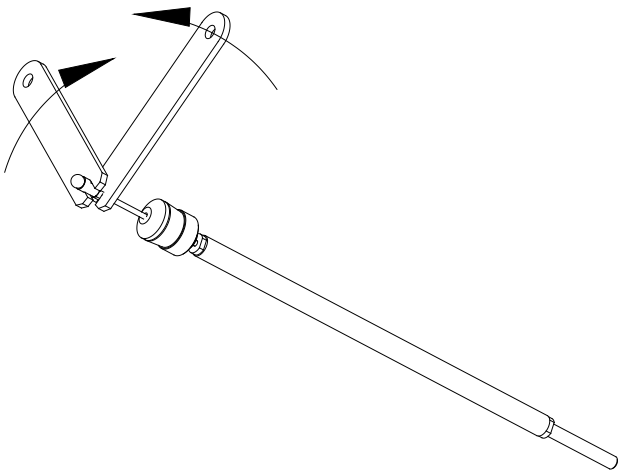

Figure 44: Needle Shaft Packing Reassembly

Needle Shaft Rebuild

1. Prior to installing the needle shaft, partially fill the internal bore of barrel with dielectric grease.

2. Fill the inner diameter of the packing tube with dielectric grease.

3. Insert the needle shaft, rear section first, into the packing tube. Rotate the needle shaft while moving back and forth inside the packing tube until fully inserted.

4. With your finger, wipe the excess grease from both ends of the packing tube. Using the excess grease, apply a thin film to the outer surface of the packing tube and to the external o-ring on the cartridge seal.

NOTE

➤ Be generous with the dielectric grease when applying it to the packing tube and needle shaft. This helps to remove air voids from this chamber. **DO NOT** apply so much grease that it creates an air lock during assembly of the applicator.

5. Apply a light film of dielectric grease to the seal retainer o-ring and install it into the external groove.

Reinstall Needle Shaft/Barrel

1. Push needle shaft assembly straight into the barrel. Apply LSCH0009-00.

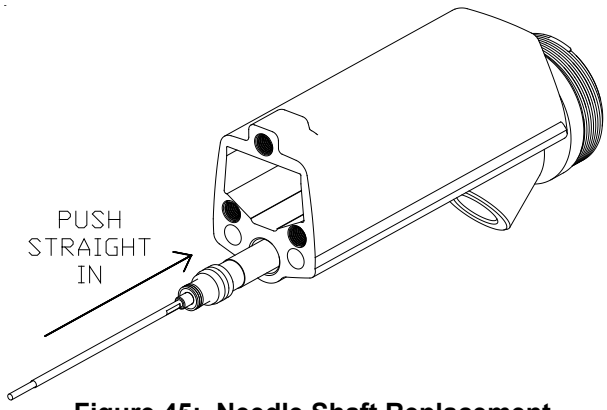

Figure 45: Needle Shaft Replacement

2. Tighten rear nut using Special Wrench 79854-00. Tighten until drag is felt on the shaft when it is pushed back and forth.

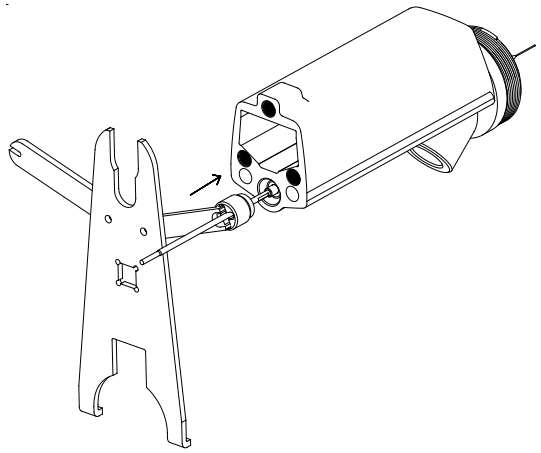

Figure 46: Adjustable Needle Shaft

3. Reinstall cascade.

4. Reinstall barrel to handle.

Power Module Removal

1. Remove the fluid line.

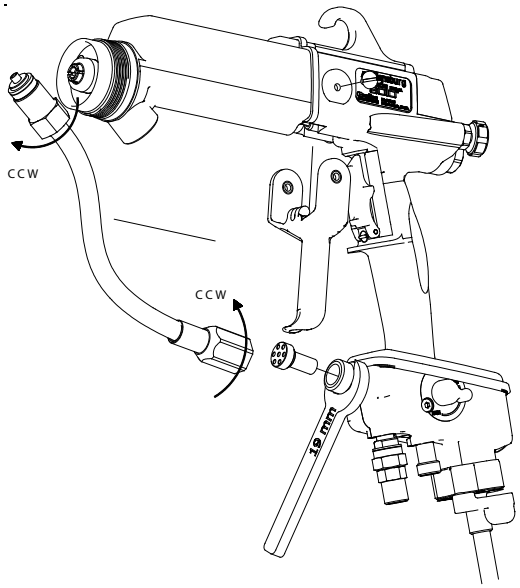

Figure 47: Fluid Line Removal

2. Remove three (3) bolts using a 3mm Allen wrench.

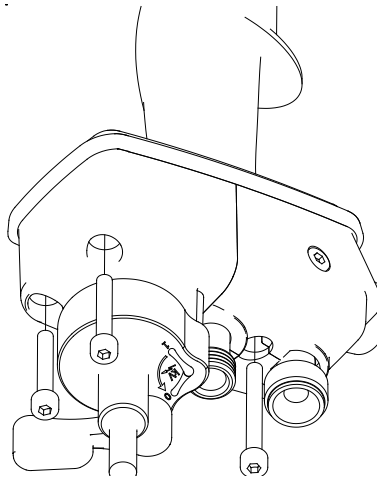

Figure 48: Power Module Removal

3. Pull the module straight off the handle.

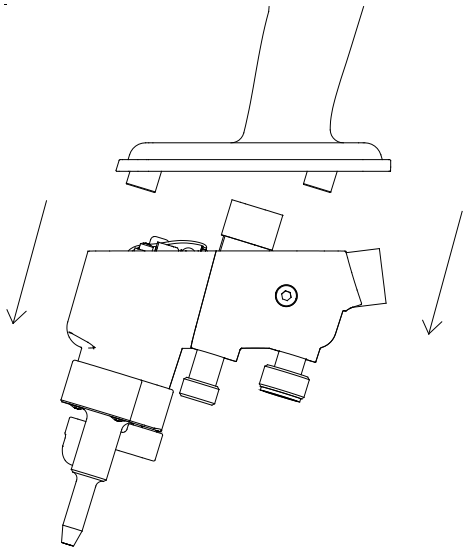

Figure 49: Power Module Removal

NOTE

➤ The power modules are not serviceable.

Handle Disassembly

1. Remove barrel.

2. Remove power module.

3. Push air valve out.

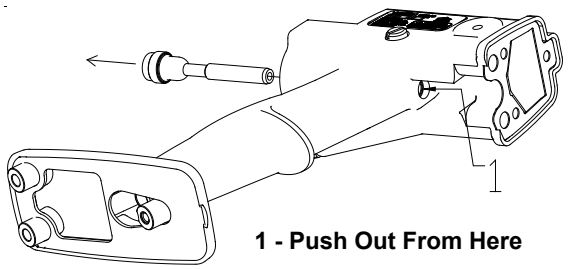

1 - Push Out From Here

Figure 50: Air Valve Removal

4. Remove the rear seal.

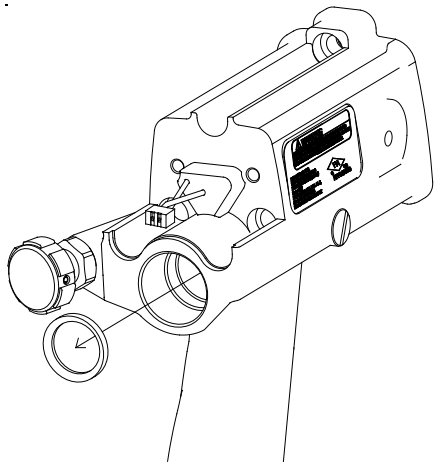

Figure 51: Rear Seal Removal

5. Using a dowel rod, push out the air valve cartridge.

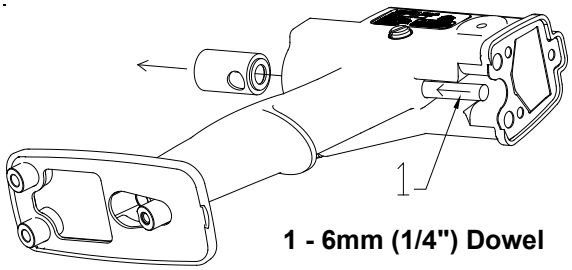

1 - 6mm (1/4") Dowel

Figure 52: Air Valve Cartridge Removal

6. Remove air valve cartridge seal (black) (see Figure 48).

7. Remove front air valve seal (white).

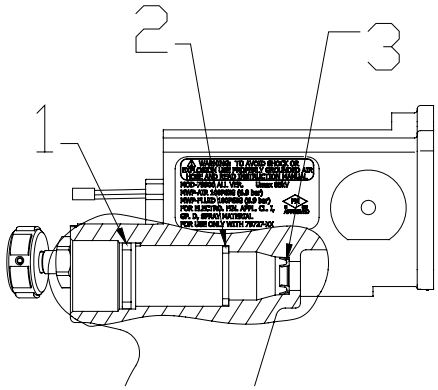

1 - Rear Seal
2 - Air Valve Cartridge Seal
3 - Front Air Valve Seal

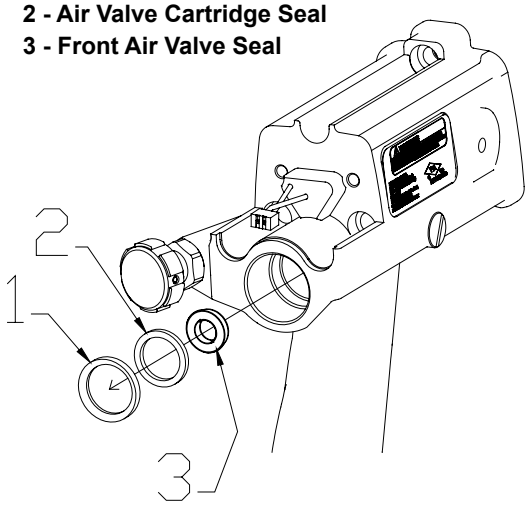

Figure 53: Air Valve Cartridge Seal and Front Seal Removal

NOTE

➤ If you remove the air valve seal, it is highly recommended that it is replaced.

Handle Rebuild

1. Install the front air valve seal using the Special Tool.

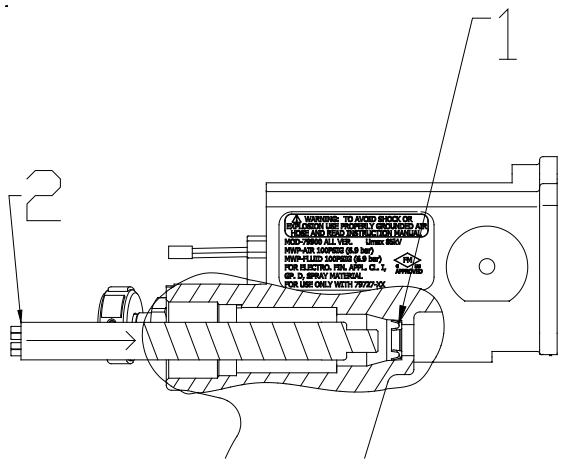

Figure 54: Air Valve Seal Replacement

2. Install the air valve cartridge seal.

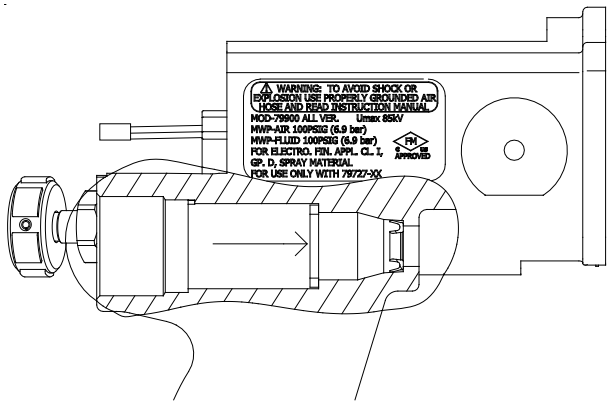

1 - 79793-00 Jam Nut Tool
2 - Front Air Valve Seal - Concave Side to Tool

Figure 55: Cartridge Seal Replacement

3. Install the air valve cartridge. Align the cartridge with tab at 12 o'clock posiition.

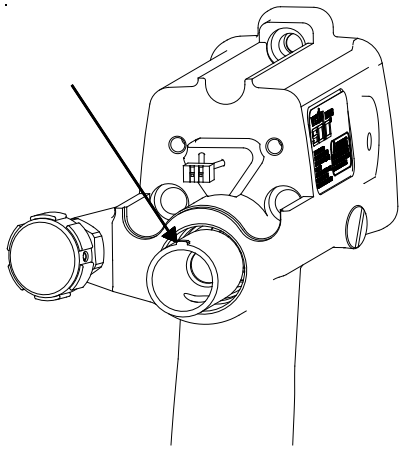

Figure 56: Air Valve Cartridge Alignment

4. Install the rear seal.

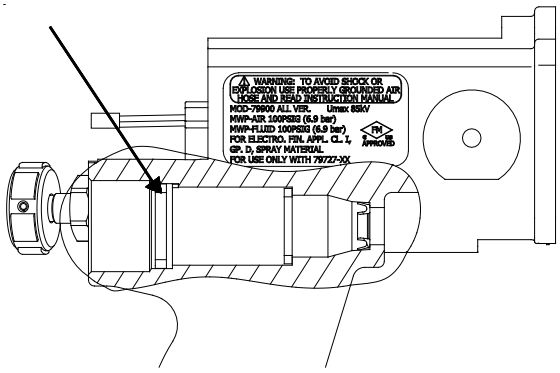

Figure 57: Rear Cartridge Seal Replacement

5. Install air valve.

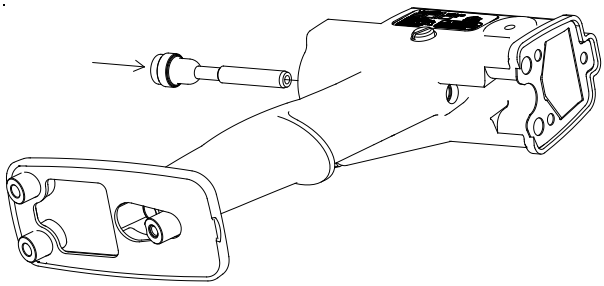

Figure 58: Air Valve Replacement

6. Reinstall barrel.

7. Install power module.

Power Module - Fluid Fitting Removal

1. Remove swivel from the power module and the power module from thehandle.

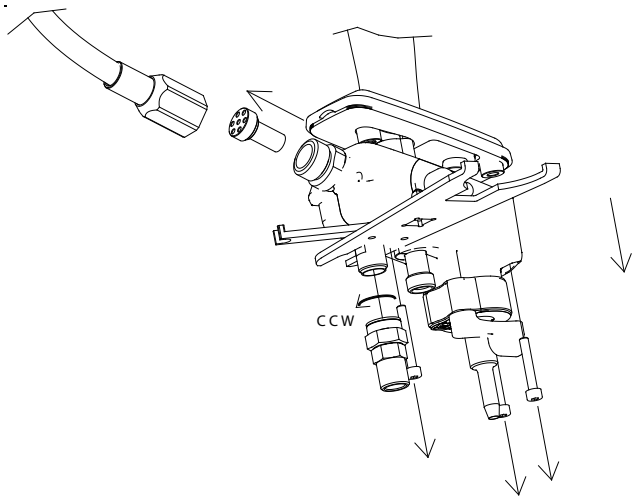

Figure 59: Power Module Removal

2. Remove two (2) screws using a 2.5mm Allen wrench.

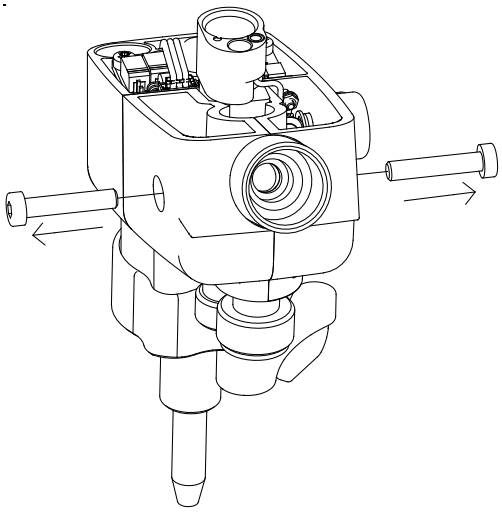

Figure 60: Fluid Fitting Removal

3. Remove the 1/4 module from the 3/4 module. Pull the fluid fitting out.

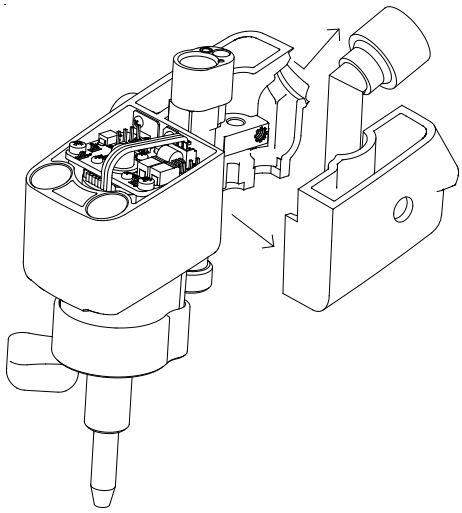

Figure 61: Fluid Fitting Removal

Fitting Replacement

1. Ensure the ground clip is properly installed. Tabs must be touching the air and fluid fitting.

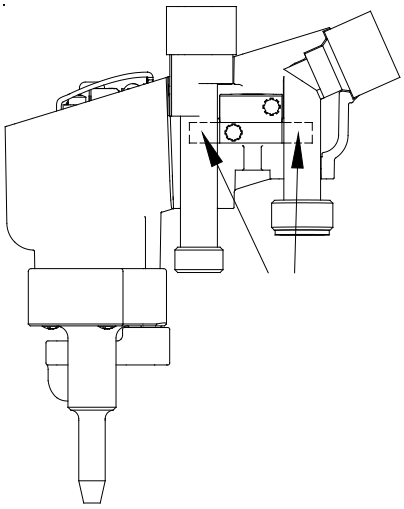

Figure 62: Ground Clip Replacement

⚠ WARNING

➤ The ground clip must be properly installed such that it touches both the air and fluid fitting.

2. Install the fluid fitting.

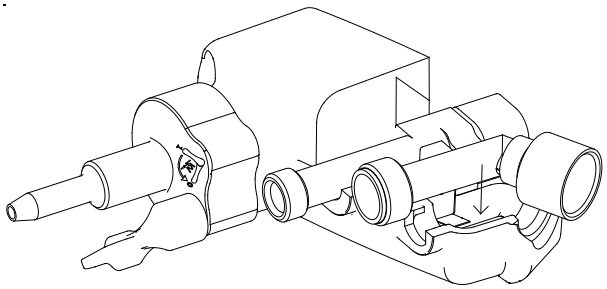

Figure 63: Fluid Fitting Replacement

3. Install the 1/4 module into the 3/4 module and tighten the two (2) screws.

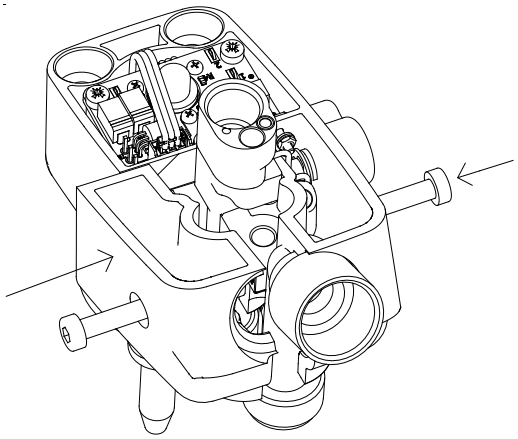

Figure 64: Module Assembly

4. Install power module to handle and tighten three (3) screws. Reinstall the fluid line.

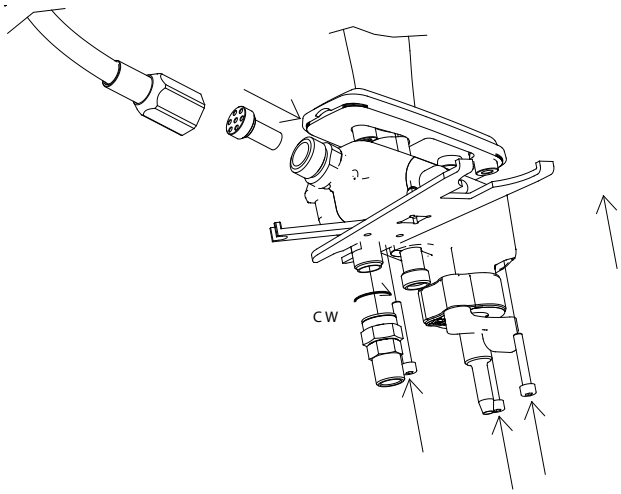

Figure 65: Power Module Assembly

TEST AND MAINTENANCE KIT USAGE (79870-00)

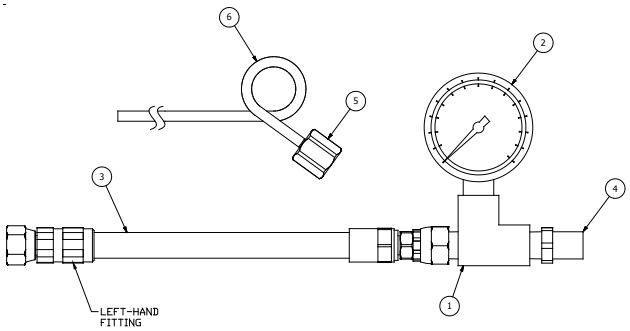

Figure 66: 79870 Test and Maintenance Kit

79870 TEST AND MAINTENANCE KIT	
Item#	**Description**
1	Brass Tee Fitting
2	100 psi Pressure Gauge
3	6" Air Hose Assembly
4	Left Hand Male Fitting
5	Barb Fitting
6	Tubing

The 79870 Test and Maintenance Kit allows the user to determine the inlet pressure at the base (handle) of the Vector Solo hand-held applicators. The Test and Maintenance Kit also allows the user to test the 79835 Power Module Assembly on the Vector Solo applicator.

The procedure to test the inlet pressure at the base (handle) of the Vector Solo applicator is as follows (see Figures 66 and 67):

1. Connect the left-hand fitting of the 79727 Air Hose to the male inlet of the Test and Maintenance Kit.

2. Connect the 6" air hose assembly between the brass tee fitting and the gun air inlet.

3. Connect the other end of the air hose to the regulated air supply.

4. Turn on main air. Trigger the applicator with kV switch on high (down position). Read the pressure at the 100 psi pressure gauge. This pressure should be at least 40 psi with air flowing for proper functioning of the Vector Solo AA90 applicator.

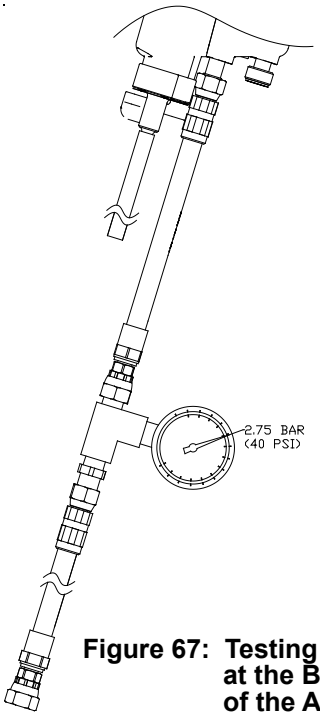

Figure 67: Testing the Pressure at the Base (Handle) of the Applicator

The procedure to test the 79835 Power Module Assembly is as follows:

1. Remove the 79835 Power Module Assembly from the handle.

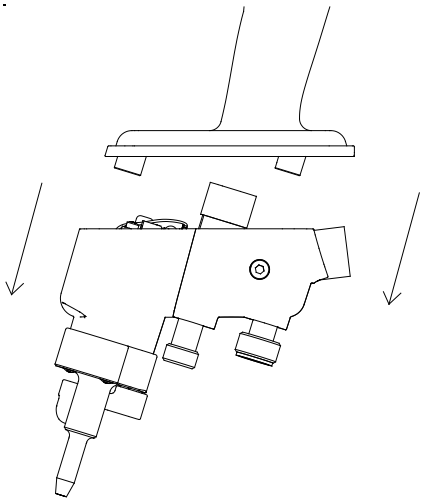

Figure 68: Remove Power Module from Handle

2. Connect the barb fitting [5] to the brass tee fitting [1]. Place the tubing [6] on the end of the barb fitting.

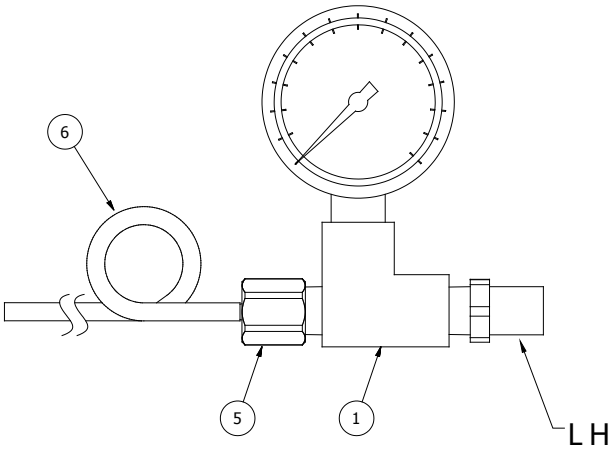

Figure 69: Connect Barb and Tubing to Tee Fitting

3. Connect the left-hand fitting of the 79727 Air Hose to the male inlet of the Test and Maintenance Kit.

4. Insert the tubing [6] into the smaller diameter hole in the top of the air fitting in the power module.

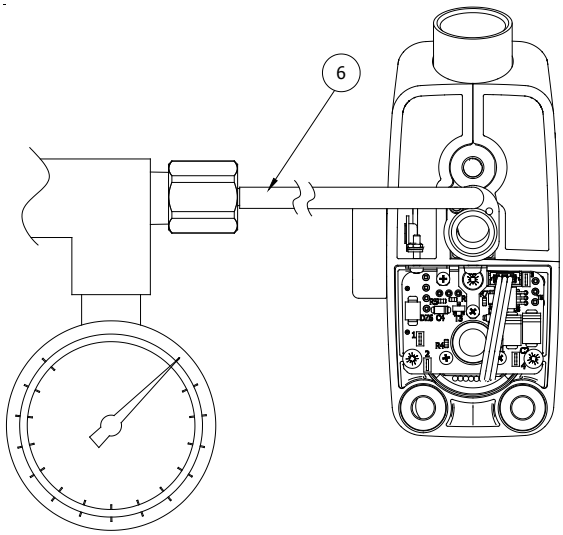

Figure 70: Connect Tubing to the Air Fitting

3. Connect the left-hand fitting of the 79727 Air Hose to the male inlet of the Test and Maintenance Kit.

4. Insert the tubing [6] into the smaller diameter hole in the top of the air fitting in the power module.
5. Connect a wire from test point 2 (on the PC board in the power module) to a true earth ground.

6. Connect a digital multi-meter to test points 1 and 2.

TP-1-Test Point #1
TP-2-Test Point #2
Ground-True Earth

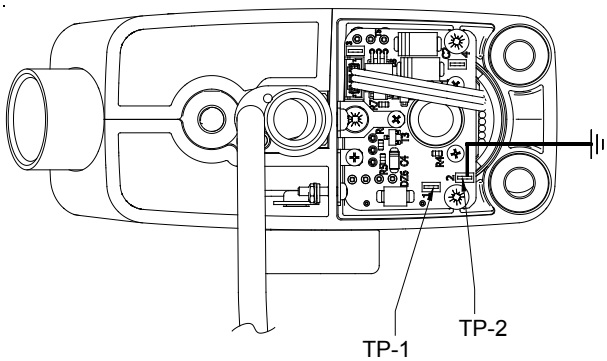

Figure 71: Connect the PC Board to a Digital Multi-Meter and True Earth Ground

7. Connect the 79727 Air Hose to main air.

8. Turn on main air and set the pressure so the pressure gauge [2] in the 79870 Test and Maintenance Kit reads 25 psi (1.7 bar). The voltage kV setpoint lever should be in the high voltage position (down). The digital multi-meter should read approximately 15 VDC.

9. If the voltage is outside this range, there is a problem with the power module circuitry. If the voltage range is acceptable the power module is operating correctly, and there is an issue with either the cascade or the wire connections leading to it.

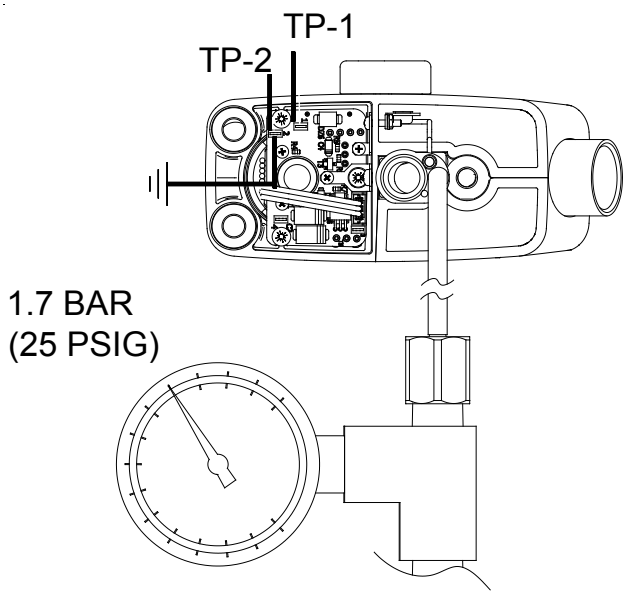

Figure 72: Set Pressure Gauge to 1.7 BAR (25 psig)

Air Hose -Ground Wire End

1. Cut the end of the air hose so that end is square.

2. Slide the sleeve and compression ring onto the air hose end.

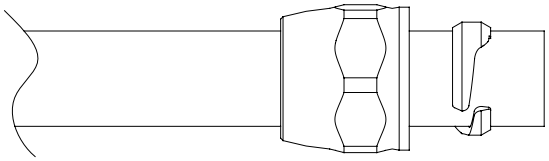

Figure 73: Sleeve and Compression Ring

3. Push the stem of the fitting all the way into the into the air hose.

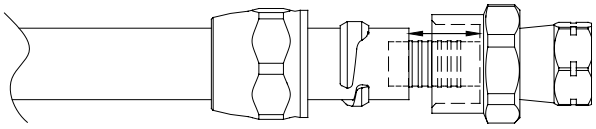

Figure 74: Ground Fitting Insertion

4. Slide the compression ring and the sleeve into the fitting body and tighten.

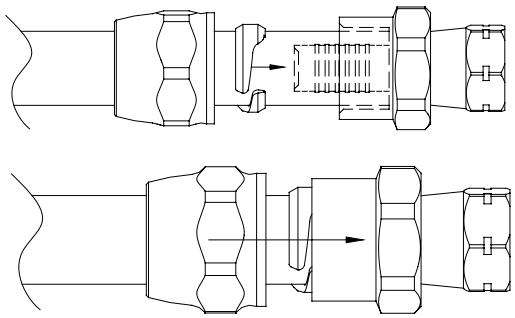

Figure 75: Sleeve Tightening

Air Hose -Applicator End

1. Cut the end of the air hose so that end is square.

2. Install the 79930 fitting (std) or 79868 (qd) into the hose end. Lightly lubricate the barb end of the fitting with LSCH-0009 di-electric lubricant. Push the fitting into the air hose up to the threads on the stem.

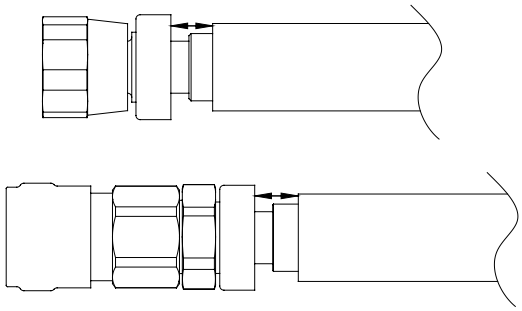

Figure 76: Fitting Insertion

3. With the 79330 fitting, hold the hose in one hand and press a 6mm or 1/4" t-handle allen wrench into the hex in the part while turning clockwise. Tighten till cap is approximately .8 mm (1/32") from the swivel nut.

4. With the 79868 DQ fitting, hold the hose in one hand and press against a firm surface while turning the body wrench flat clockwise. Tighten till cap is approximately .8 mm (1/32") from the QD base.

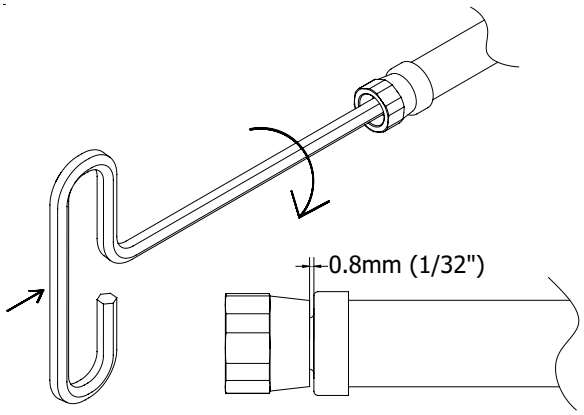

Figure 77: Tightening 79930 Fitting

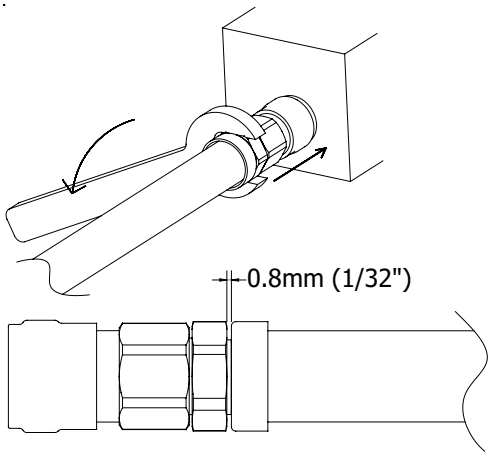

Figure 78: Tightening 79868 QD Fitting

Resistance Test

1. If the hose is changed, the resistance must be checked. Using a Meg Ohm meter at 1000V measure the resistance from the lug of the ground wire to the body of the QD (79868) or the swivel nut (79930). The reading must be less than .5 Mega Ohms resistance end to end.

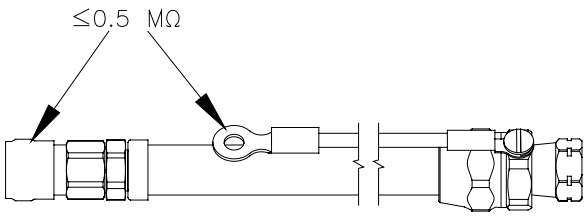

Figure 79: Air Hose Resistance Test

TROUBLESHOOTING GUIDE

General Problem	Possible Cause	Solution
ELECTRICAL		
No kV	On-Off lever in wrong position	Ensure the On/Off lever is in the On position.
	Low pressure	Ensure 40 psig (2.75 bar) at the applicator handle with applicator triggered.
	No ground connection	Ensure the air hose is properly grounded to the earth ground.
	Cascade not functioning	Ensure cascade is functioning properly.
	Three (3) screws at base of handle are loose	Tighten screws to ensure proper assembly.
	Failed power module	Ensure module is properly functioning.
Low kV	Fluid remnants in the air passage	Clean air passages with non-polar solvent.
	Wrong solvent used for final cleaning process	Use non-polar solvent for the final cleaning process.
	Add sufficient air pressure at handle	Ensure 2.8 bar (40 psig) at the handle with applicator triggered.
Poor Atomization and Distribution	Partially clogged nozzle	Clean out.
	Low fluid pressure	Increase pump air pressure.
	Viscosity too high	Try nozzle with narrower fan or smaller orifice.
	Improper nozzle	Try nozzle with narrower fan or smaller orifice.
	Badly worn nozzle	Thin the material to a viscosity that is sprayable.
	High voltage electrode bend	Straighten electrode or replace nozzle assembly.
	Low shaping air pressure	Re-adjust shaping air pressure.

(Continued On Next Page)

TROUBLESHOOTING GUIDE (Cont.)

General Problem	Possible Cause	Solution
ELECTRICAL		
Poor Wraparound	Poor atomization	See “Poor Atomization and Distribution”.
	Excessive exhaust velocity	Reduce (with code limits).
	Excessive fluid pressure	Reduce air pressure to pump.
	Applicator held too close to target	Hold applicator further back.
	Paint too conductive	Consult Ransburg technical assistance.
	Poor target ground	Check ground integrity from target through support to ground.
Paint Wraps Back On Operator	Poor ground on parts	Check that parts are fully grounded, strip workholders.
	Applicator held too far from parts	Hold applicator closer.
	Booth exhaust insufficient or improperly rounted	Increase, or adjust direction, change booth filter.
	Improper spray technique	Keep applicator directed at work.
No Paint Delivery	Clogged nozzle	Blow out nozzle.
	Clogged hose or filters	Clean.
	No pressure at paint pump	If pump air supply OK, consult pump manual.
Excessive Surging	Restriction in pump air line	Remove restriction.
	Insufficient pump capacity	Secure larger pump or reduce output.
	Clogged paint filter	Service or replace.
	Low air volume capacity	Check factory air capacity.
	Nozzle too large	Replace with correct nozzle.
Persistent Nozzle Clogging	Paint allowed to dry in nozzle or line	Flush lines with solvent after each use.
	Paint applicator filter too coarse or damaged	Replace or change to finer screen paint filter.
	Paint pigments too coarse	Pre-filter paint and/or use larger nozzle orifice.

(Continued On Next Page)

TROUBLESHOOTING GUIDE (Cont.)

General Problem	Possible Cause	Solution
ELECTRICAL		
Paint Leaks Through Center of Nozzle (Failure to Shut Off)	Loose nozzle cap	Tighten nut.
	Improper trigger adjustment	Readjust.
	Defective or dirty valve seat	Flush out or replace as needed.
Paint Leaks Around the Nozzle Cap	Loose nozzle cap	Tighten nut.
	Fluid seal worn	Replace seal.
Paint Leaks At Rear of Barrel	Loose packing nut	Tighten packing nut.
Orange Peel or Rough Finish	Evaporation rate too fast	Use slower evaporating solvent.
	Poor atomization	See “Poor Atomization and Distribution”.
	Viscosity too high	Add solvent or heat.
Paint Runs or Has Poor Hiding Qualities	Low solids paint	Use less solvent.
	Low viscosity	Use less solvent.
	Excessive delivery	Use smaller nozzle, wider fan angle, and lower pump pressure.

PARTS IDENTIFICATION

79698 VECTOR SOLO AA90 APPLICATOR MODEL IDENTIFICATION

When ordering, use 79698-A, B, C, D, and E as indicated by Tables A, B, C, D, and E. Five digits must follow the basic part number, for example:

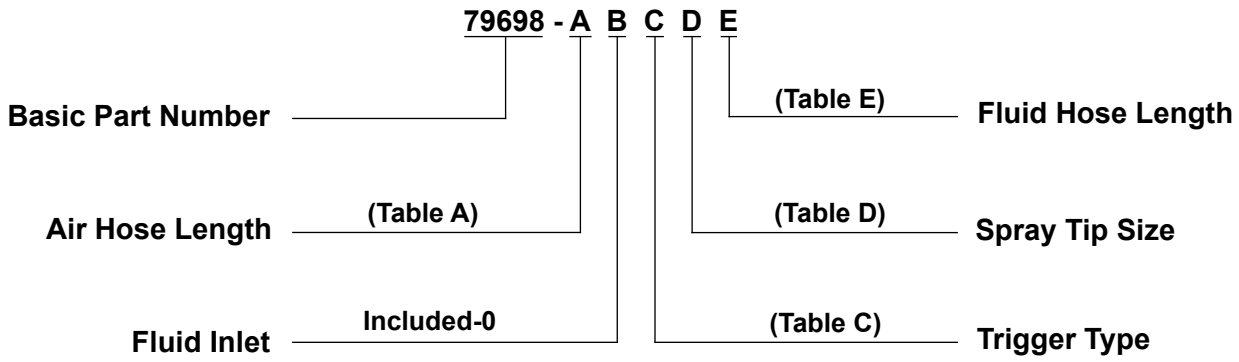

TABLE A - AIR HOSE LENGTH AND AIR HOSE TYPE			
"A" Dash #	Description	Description	"A" Air Hose/Stem
1	10m (33-ft.)	Standard Air Hose	79727-10 / ---------
2	15m (49-ft.)	Standard Air Hose	79727-15 / ---------
3	20m (66-ft.)	Standard Air Hose	79727-20 / ---------
4	30m (99-ft.)	Standard Air Hose	79727-30 / ---------
5	10m (33-ft.)	Air Hose W/Quick-Disconnect / QD Stem	79727-11/ 79869-00
6	15m (49-ft.)	Air Hose W/Quick-Disconnect / QD Stem	79727-16 / 79869-00
7	20m (66-ft.)	Air Hose W/Quick-Disconnect / QD Stem	79727-21/ 79869-00
8	30m (99-ft.)	Air Hose W/Quick-Disconnect / QD Stem	79727-31/ 79869-00

TABLE C - TRIGGER TYPE

Dash #	Description	"C"
2	2-Finger Trigger	79694-00

TABLE D - SPRAY TIP SIZE

Dash #	Description	"D"
0	Carbide Tip Assembly	79691-0811
1	Carbide Tip Assembly	79691-0813
2	Carbide Tip Assembly	79691-1011
3	Carbide Tip Assembly	79691-1015

TABLE E - FLUID HOSE LENGTH

Dash #	Description	"E"
0	No Fluid Hose	--
1	11m (36-ft.) Pant Hose, 3/16" ID	7994-36
2	15m (50-ft.) Paint Hose, 3/16" ID	7994-50
3	23m (75-ft.) Paint Hose, 3/16" ID	7994-75
4	30m (100-ft.) Paint Hose, 3/16" ID	7994-100

NOTES

VECTOR SOLO AA90 SOLVENTBORNE APPLICATOR

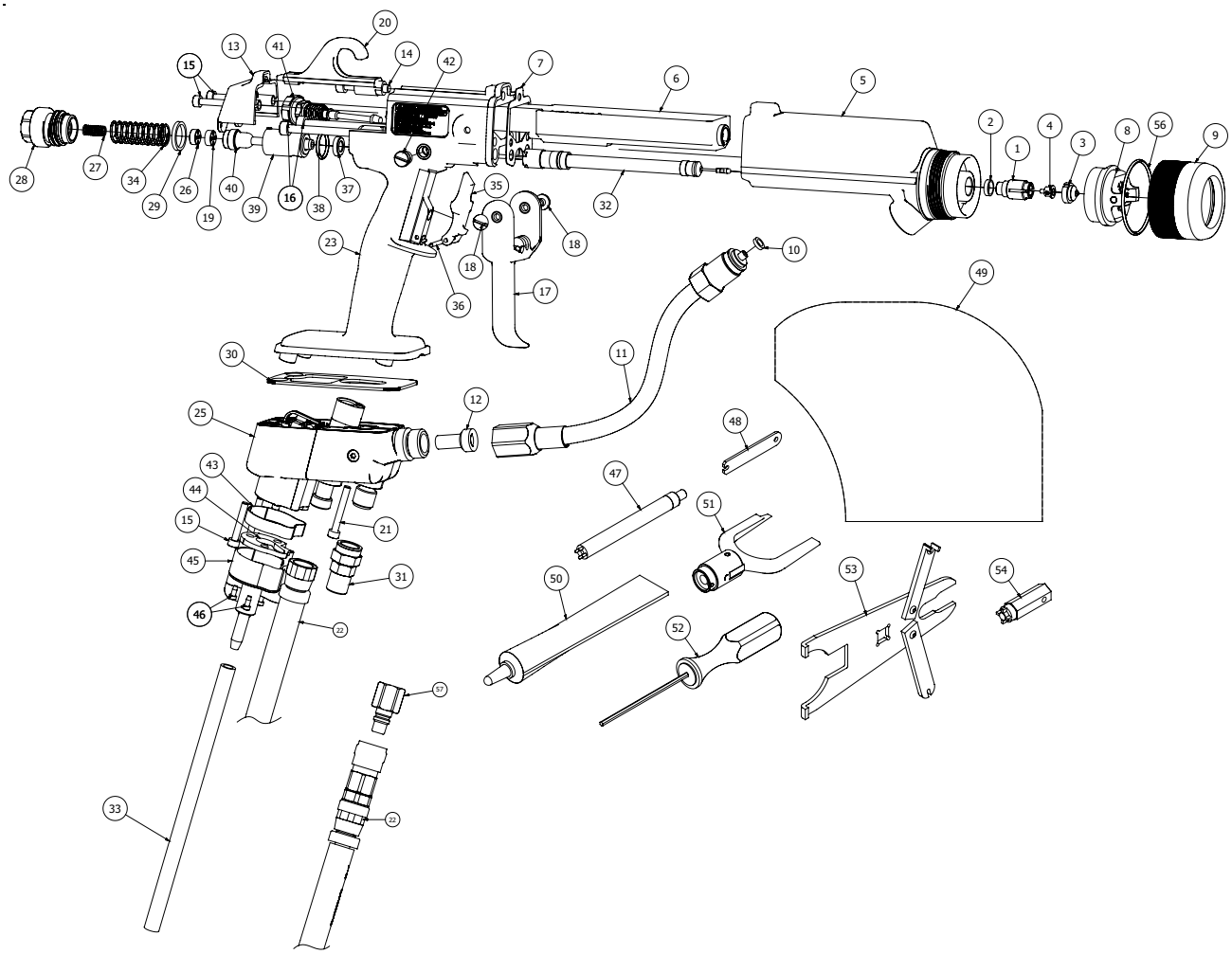

Figure 80: Vector Solo AA90 Applicators Parts Breakdown

VECTOR SOLO AA90 SOLVENTBORNE APPLICATOR - PARTS LIST (Figure 80)

Item #	Part #	Description	Qty
1	79668-00	Assembly, Fluid Nozzle	1
2	72375-03	Seal, Teflon	1
3	**Table "D"**	Carbide Tip Assemblies	1
4	79692-00	Seal, No Pre-Orifice	1
	79692-00-K3	Kit of 3 (Optional, No Pre-Orifice)	
	79692-01	Seal, .0101" (.256mm) Pre-Orifice	
	79692-02	Seal, .0121" (.307mm) Pre-Orifice	
	79692-03	Seal, .0141" (.358mm) Pre-Orifice	
	79692-04	Seal, .0161" (.409mm) Pre-Orifice	
	79692-05	Seal, .0201" (.511mm) Pre-Orifice	
	79692-06	Seal, .0221" (.561mm) Pre-Orifice	
5	79689-00	Assembly, Vector Solo AA90 Barrel	1
6	79600-00	Cascade Assembly	1
7	79832-00	Gasket, Barrel	1
8	79695-00	Assembly, Air Cap, Vector Solo AA90	1
9	79568-00	Ring, Retaining, Air Assist	1
10	72375-02	Seal, Teflon	1
11	79921-00	Assembly, Fluid Tube, Vector Solo AA90	1
12	7720-01	Filter, Paint (Standard, .005" Spacing, 100 Mesh)	1
	7720-02	Filter, Paint (Optional, .009" Spacing, 60 Mesh)	
13	79816-00	Assembly, Rear Cover	1
14	79798-03	Socket Head Cap Screw, M5 X 30	1
15	79799-01	Socket Head Cap Screw, M4 X 25	4
16	79798-02	Socket Head Cap Screw, M5 X 80	2
17	**Table "C"**	Trigger, Modified, Vector Solo AA90	1
18	79454-00	Screw, Trigger Retention	2
19	79762-00	Nut, Fluid Jam	1
20	79701-00	Hook, Molded	1
21	79799-02	Socket Head Cap Screw, 4mm X 30mm Lg.	1
22	**Table "A"**	Assembly, Air Hose	1
23	79833-04	Assembly, Handle Vector Solo AA90 (Includes Items 34, 35, 36, 37, 38, 39, 40, and 41)	1
24	79833-05	Assembly, Handle Only	1
25	79835-01	Assembly, Power Module (Includes Items 42, 43, 44, and 45)	1
26	79666-00	Nut, Jam	1
27	78824-00	Spring	1
28	79673-00	Assembly, Air Valve Knob	1
29	79781-00	Seal, Adjustment Bushing	1
30	79837-00	Gasket, Power Module	1
31	79920-00	Swivel, High Pressure, Vector Solo AA90	1
32	79688-00	Assembly, Needle Shaft, Vector Solo AA90	1
33	79861-00	Tubing, Clear Tygothane Polyurethane, 1/4" ID X 3/8" OD	1
34	79774-00	Spring, Air Valve Return	1
35	79662-00	Trigger Lock	1
36	79602-00	Roll Pin	1
37	79760-00	Seal, Air Valve	1
38	79001-09	O-Ring, Solvent Proof	1

(Continued On Next Page)

VECTOR SOLO AA90 SOLVENTBORNE APPLICATOR - PARTS LIST (Cont.) (Figure 80)

Item #	Part #	Description	Qty
39	79770-00	Cartridge, Air Valve	1
40	79772-00	Assembly, Air Valve	1
41	79759-00	Assembly, Fan Air Adjust Valve	1
42	79847-00	Valve, Atom Adjust (Optional)	1
	79847-01	Plug, Atom (Standard installed in applicator)	
43	79881-00	Gasket, Exhaust, Wrap-Around	1
44	79836-00	Gasket, Exhaust	1
45	79843-00	Assembly, Exhaust Housing	1
46	79805-00	Screw	3
47	79793-00	Jam Nut Removal/Seal Install Tool	1
48	74133-00	Wrench, Needle Shaft	1
49	79529-00-K5	Applicator Cover	1
50	LSCH0009-00	Dielectric Grease	1
51	79642-00	Cap Removal Tool	1
52	79862-01, 02, -03	Hex Driver (2.5mm, 3mm, and 4mm) Wrench, Vector Solo AA90	1
53	79854-00	(Packing Adjust, Barrel Removal, Nozzle Removal)	1
54	79676-00	Wrench, Nozzle Removal	1
55	**Table "E"**	Fluid Hose (Not Shown)	1
56	LSOR0005-17	O-Ring, Teflon Encapsulated	1
57	79869-00	Stem, Male QD (Included With QD Ordered Models)	1

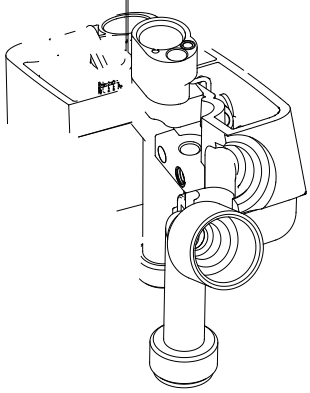

Figure 81: Power Module Replaceable Parts

POWER MODULE REPLACEABLE PARTS - PARTS LIST (Figure 81)

Item #	Part #	Description	Qty
1	79919-00	Fluid Inlet, AA	1
2	79746-00	Grounding Clip	1
3	79814-00	Socket Head Cap Screw, 4mm X 20mm Lg.	2
4	79637-00	1/4 Power Module	--
5	79636-00	3/4 Power Module	--

ACCESSORIES

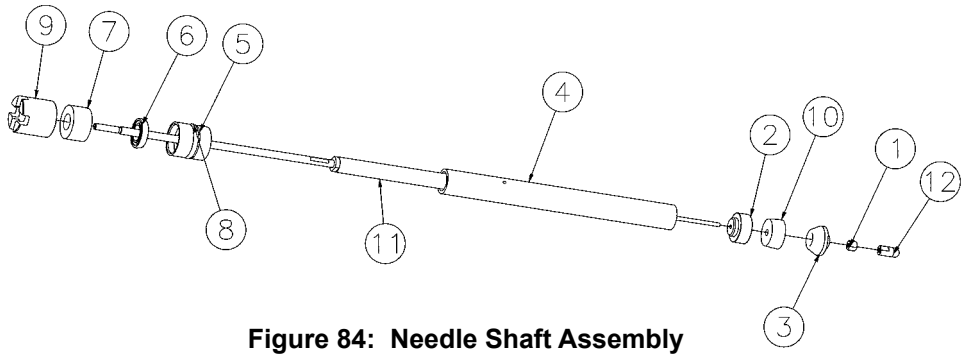

Figure 84: Needle Shaft Assembly

NEEDLE SHAFT ASSEMBLY - PARTS LIST (Figure 84)			
Item #	**Part #**	**Description**	**Qty**
1	73351-00	Nut, Jam	1
2	73346-00	Seal, Pusher	1
3	79618-00	Spreader, Seal, Machined	1
4	72378-01	Packing Tube	1
5	73347-00	Container, Rear Seal	1
6	74330-00	Seal, High Pressure	1
7	73348-00	Retainer, Rear Seal	1
8	72209-05	O-Ring, Metric	1
9	73354-00	Nut, Packing	1
10	73345-00	Seal, Front U-Cup	1
11	79670-00	Assembly, Needle, Solo AA	1
12	73350-00	Assembly, Ball Valve	1

Figure 85: Fluid Hose - Optional

FLUID HOSE - PARTS LIST (Figure 85)		
Item #	**Part #**	**Description**
	7994-36	Fluid Hose Assembly 4.8 mm (3/16") ID, 11 m (33 ft.) long
	7994-50	Fluid Hose Assembly 4.8 mm (3/16") ID, 14 m (50 ft.) long
	7994-75	Fluid Hose Assembly 4.8 mm (3/16") ID, 23 m (75 ft.) long
	7994-100	Fluid Hose Assembly 4.8 mm (3/16") ID, 30 m (100 ft.) long

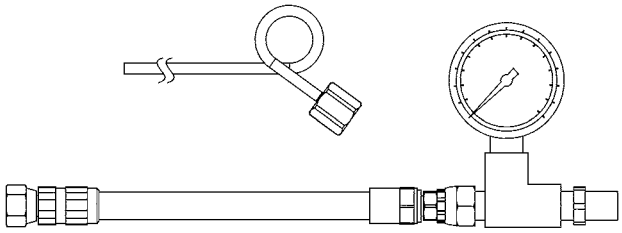

Figure 86: Test and Maintenance Kit - Optional

TEST AND MAINTENANCE KIT - (OPTIONAL) (Figure 86)	
Part #	**Description**
79870-00	Test and Maintenance Kit

VECTOR SOLO AA90 APPLICATOR RECOMMENDED SPARE PARTS (Quantities Per Applicator)		
Part #	**Description**	**Qty**
79668-00	Fluid Nozzle	2
79697-00	Assembly, Barrel, Vector Solo AA90	1
79600-00	Cascade Assembly	1
79832-00	Gasket, Barrel	1
79001-09	O-Ring, Solvent Proof	2
79695-00	Air Cap, Vector Solo AA90	2
79568-00	Retaining Ring	1
LSOR0005-17	O-Ring, Teflon Encapsulated	1
79694-00	Assembly, Trigger	1
79454-00	Screw, Trigger Retention	2
79768-00	Nut, Fluid Jam, Front	1
79744-00	Spring, Air Valve Return	1
79835-00	Assembly, Power Module (Includes Items 39, 40, 41, 42, and 43)	1
79768-00	Nut, Fluid Jam,Spring Guide	1
78824-00	Spring	1
79781-00	Seal, Adjustment Bushing	1
79837-00	Gasket, Handle to Power Module	1
79760-00	Seal, Air Valve	1
79847-00	Valve, Compensation Atomizing	1
79836-00	Gasket, Exhaust	1
79843-00	Assembly, Exhaust Housing	1
79529-00-K5	Applicator Cover	2
LSCH0009-00	Dielectric Grease	2
72375-02	Fluid Tube Seal	2
72375-03	Nozzle Seal	1
79662-00	Trigger Lock	1
79602-00	Roll Pin	1

WARRANTY POLICIES

LIMITED WARRANTY

Ransburg will replace or repair without charge any part and/or equipment that fails within the specified time (see below) because of faulty workmanship or material, provided that the equipment has been used and maintained in accordance with Ransburg's written safety and operating instructions, and has been used under normal operating conditions. Normal wear items are excluded.

THE USE OF OTHER THAN RANSBURG APPROVED PARTS VOID ALL WARRANTIES.

SPARE PARTS: One hundred and eighty (180) days from date of purchase, except for rebuilt parts (any part number ending in "R") for which the warranty period is ninety (90) days.

EQUIPMENT: When purchased as a complete unit, (i.e., guns, power supplies, control units, etc.), is one (1) year from date of purchase. **WRAPPING THE APPLICATOR, ASSOCIATED VALVES AND TUBING, AND SUPPORTING HARDWARE IN PLASTIC, SHRINK-WRAP, OR ANY OTHER NON-APPROVED COVERING, WILL VOID THIS WARRANTY.**

RANSBURG'S ONLY OBLIGATION UNDER THIS WARRANTY IS TO REPLACE PARTS THAT HAVE FAILED BECAUSE OF FAULTY WORKMANSHIP OR MATERIALS. THERE ARE NO IMPLIED WARRANTIES NOR WARRANTIES OF EITHER MERCHANTABILITY OR FITNESS FOR A PARTICULAR PURPOSE. RANSBURG ASSUMES NO LIABILITY FOR INJURY, DAMAGE TO PROPERTY OR FOR CONSEQUENTIAL DAMAGES FOR LOSS OF GOODWILL OR PRODUCTION OR INCOME, WHICH RESULT FROM USE OR MISUSE OF THE EQUIPMENT BY PURCHASER OR OTHERS.

EXCLUSIONS:

If, in Ransburg's opinion the warranty item in question, or other items damaged by this part was improperly installed, operated or maintained, Ransburg will assume no responsibility for repair or replacement of the item or items. The purchaser, therefore, will assume all responsibility for any cost of repair or replacement and service related costs if applicable.

MANUAL CHANGE SUMMARY

This manual was published to supersede Service Manual **AH-06-01.10 Vector Solo Applicators** to make the following changes:

1. Updated manual due to nozzle thread change from 9050 Control Unit to the 9060 Control Unit.

Ransburg

Manufacturing
1910 North Wayne Street
Angola, Indiana 46703-9100
Telephone: 260-665-8800
Fax: 260-665-8516

Technical Service — Assistance
320 Philips Ave.
Toledo, Ohio 43612-1493
Telephone (toll free): 800-233-3366
Fax: 419-470-2233

Technical Support Representative will direct you to the appropriate telephone number for ordering Spare Parts.

© 2013 Ransburg. All rights reserved.
Models and specifications subject to change without notice.

Form No. AH-08-04.2
Litho in U.S.A.
2/13