Spare parts list pump head Finish 400 G

Item No.	Order No.	Description
1	9900 734	Cylinder head stud M 4 x 45 DIN 84
2	9922 523	Snap ring 18 x 1.2 DIN 471
3	0158 345	Spring plate
4	0158 339	Piston D 19
5	0158 332	Cylindrical compression spring
6	9971 181	O-ring 50 x 2.5
7	0253 234	Pressure insert, assy.
8	0169 239	Diaphragm, assy.
9	0253 364	Insert
10	9971 395	O-ring 10 x 1.25
11	0169 248	Relief valve, assy.
12	0055 402	Return hose fitting
13	0253 308	Paint section
14	9921 605	Spring washer 12 DIN 7980
15	9906 014	Cylinder head stud M 12 x 60 DIN 912
16	0010 764	Sealing ring
17	0253 242	Inlet valve
18	0253 370	Inlet valve button housing
19	0253 345	Inlet
20	0253 218	Actuating mechanism, assy.
21	0253 336	Screw plug
22	9970 144	Sealing ring A 6.5 x 9.5 x 1 DIN 7603
23	0010 778	Sealing ring
24	0254 236	Valve seat, assy.
25	9941 501	Ball D 11
26	0253 405	Spring supporting ring
27	0010 779	Compression spring
28	0253 321	Pressure screw
29	9970 102	Sealing ring A 22 x 27 x 1.5 DIN 7603
30	0253 222	End cap, assy.
31	9904 302	Screw plug
32	9970 103	Sealing ring A 16 x 20 x 1.5 DIN 7603
33	0254 206	Button, assy.
34	9970 109	Sealing ring
35	9991 797	Pressure gauge 0-400 bar
36	9971 365	O-ring 9.25 x 1.78
37	0010 852	Control unit
38	0010 861	Compression spring
39	0010 858	Clip
40	0010 859	Stop sleeve
41	0158 251	Pressure regulating knob
42	0158 245	Pressure control valve, assy.

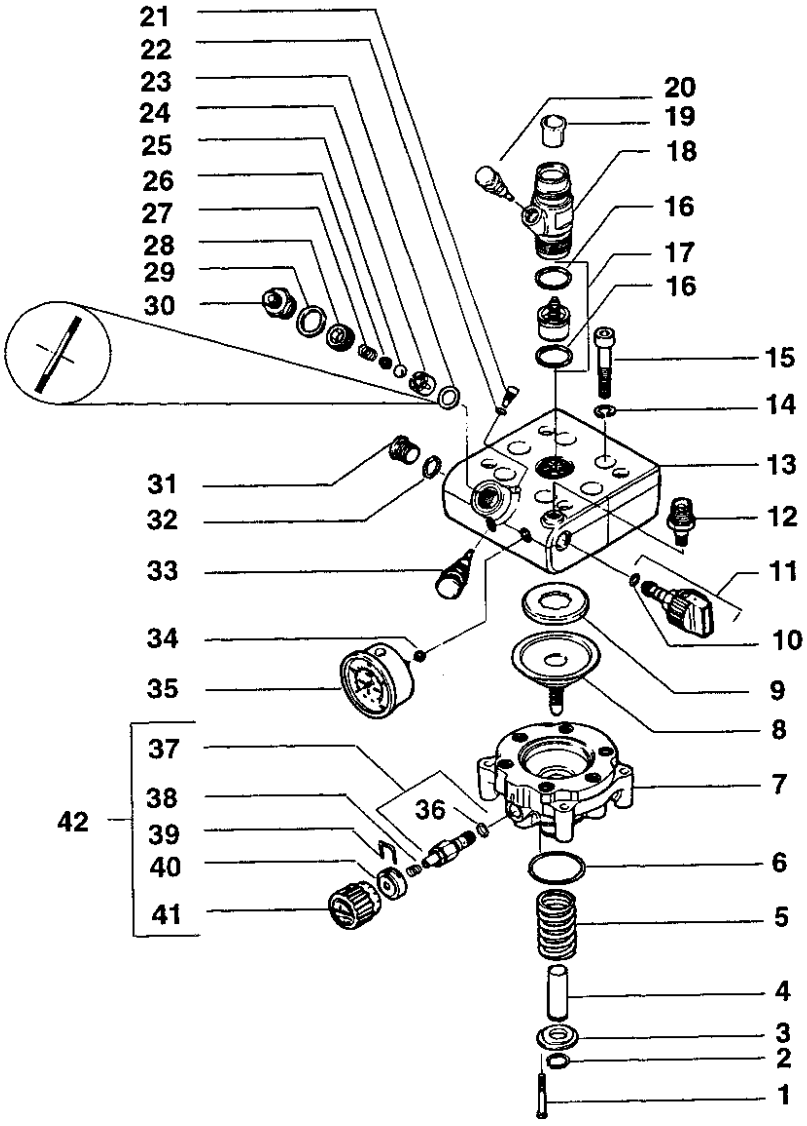

Spare parts list pump head Finish 500 G

Item No.	Order No.	Description	Item No.	Order No.	Description
1	9971 181	O-ring 50 x 2.5	22	9970 144	Sealing ring A 6.5 x 9.5 x 1 DIN 7603
2	0254 313	Pressure insert, assy.	23	0010 778	Sealing ring RD 20
3	0254 339	Piston D 25	24	0254 236	Valve seat, assy.
4	9922 622	Round wire snap ring A 25	25	9941 501	Ball D 11
5	0034 357	Compression spring	26	0253 405	Spring supporting ring
6	0190 345	Spring plate	27	0190 304	Compression spring
7	9922 616	Snap ring	28	0253 321	Pressure screw
8	0254 705	Diaphragm, assy.	29	9970 102	Sealing ring A 22 x 27 x 1.5 DIN 7603
9	0254 364	Insert	30	0253 222	End cap, assy.
10	9971 395	O-ring 10 x 1.25	31	9904 302	Screw plug
11	0169 248	Relief valve, assy.	32	9970 103	Sealing ring A 16 x 20 x 1.5 DIN 7603
12	0055 402	Return hose fitting	33	0254 206	Button, assy.
13	0254 303	Paint section	34	9970 109	Sealing ring
14	9921 605	Spring washer 12 DIN 7980	35	9991 797	Pressure gauge 0-400 bar
15	9906 014	Cylinder head stud M 12 x 60 DIN 912	36	9971 365	O-ring 9.25 x 1.78
16	0010 764	Sealing ring	37	0010 852	Control unit
17	0254 243	Inlet valve	38	0010 861	Compression spring
18	0253 370	Inlet valve button housing	39	0010 858	Clip
19	0253 345	Inlet	40	0010 859	Stop sleeve
20	0253 218	Actuating mechanism, assy.	41	0158 251	Pressure regulating knob
21	0253 336	Screw plug	42	0158 245	Pressure control valve, assy.

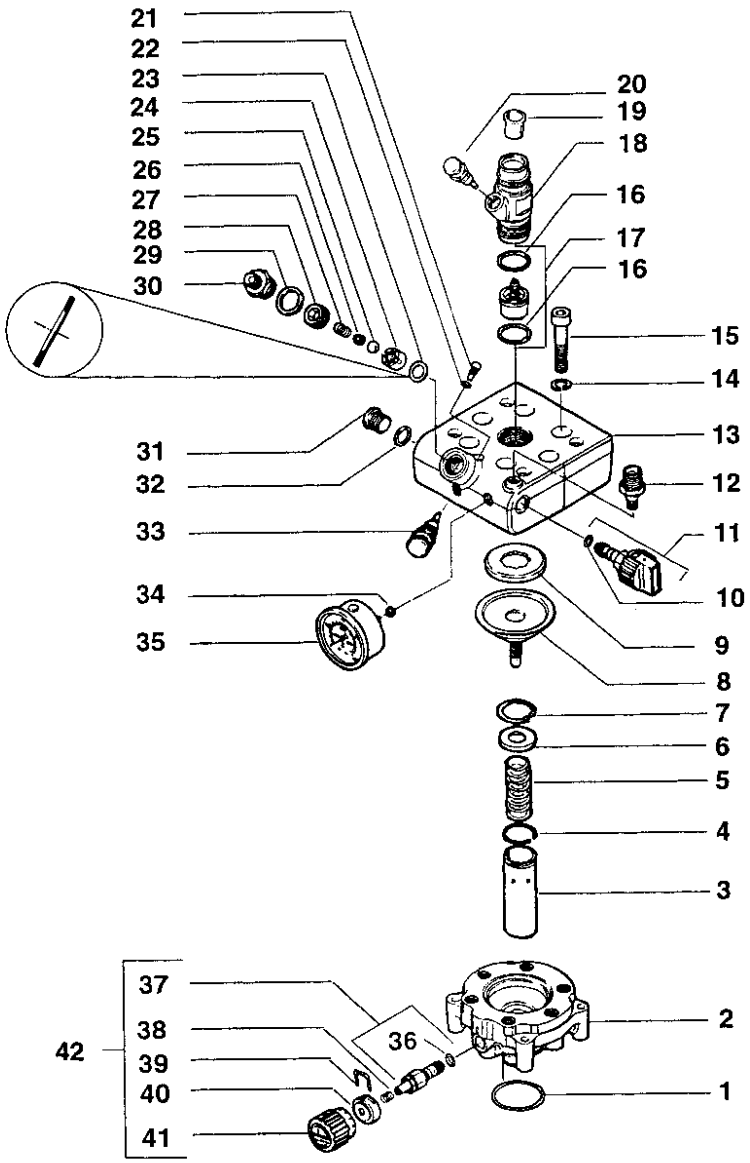

Spare parts list pumping set Finish 400 G / 500 G

Item	Order No. Finish 400 G	Order No. Finish 500 G	Description
1	9900 508	9900 508	Raised countersunk head screw M 5 x 16 (13)
2	0254 319	0254 319	Front cover
3	0254 320	0254 320	Seal
4	9900 312	9900 312	Cylinder head stud M 6 x 20 DIN 912 (2)
5	9921 502	9921 502	Spring washer A6 DIN 127 (6)
6	0253 326	0253 326	Bearing cover (2)
7	9960 425	9960 426	Roller
8	9904 302	9904 302	Screw plug M 16 x 1.5 DIN 908
9	9970 146	9970 146	Sealing ring C 16 x 20 x 2 DIN 7603
10	0253 776	0254 776	Hydraulic component housing with Items 25 + 27
11	9970 528	9970 528	Shaft sealing ring A 35 x 50 x 7 DIN 3760
12	9860 404	———	Cylindrical roller bearing NJ 207 DIN 5412
	———	9960 427	Cylindrical roller bearing NJ 2207 C3
13	9920 727	9920 727	Nilos ring
14	9920 726	9920 726	Nilos spacer ring
15	9922 518	9922 518	Snap ring 35 x 1.5 DIN 471
16	0253 425	0254 392	Eccentric shaft
17	9931 002	9931 002	Feather key A8x7x32
18	9920 730	9920 730	Spacer ring
19	9920 731	9920 731	Nilos ring (2)
20	9960 428	9960 428	Cylindrical-roller bearing NJ 205 C3
21	9922 506	9922 506	Snap ring 25x1.2
22	0254 393	0254 393	Flange
23	9900 108	9900 108	Hexagon screw M6x20 (4)
24	0254 390	0254 390	Toothed belt disc
25	0253 361	0254 361	Oil suction hose (included in Item 10)
26	0288 406	0288 406	Hose clip
27	———	———	Sleeve (included in Item 10)
28	9971 172	———	O-ring 8 x 2,5 (2)
	———	9971 339	O-ring 8.9 x 2.7 (2)
29	9900 377	9900 377	Cylinder head stud M 8 x 50 DIN 912 (4)
30	0253 350	0253 350	Covering plate
31	0253 779	0254 775	Pump head, assy.
32	0253 360	0253 360	Oil return hose
33	0253 255	0253 255	Oil dipstick, assy.

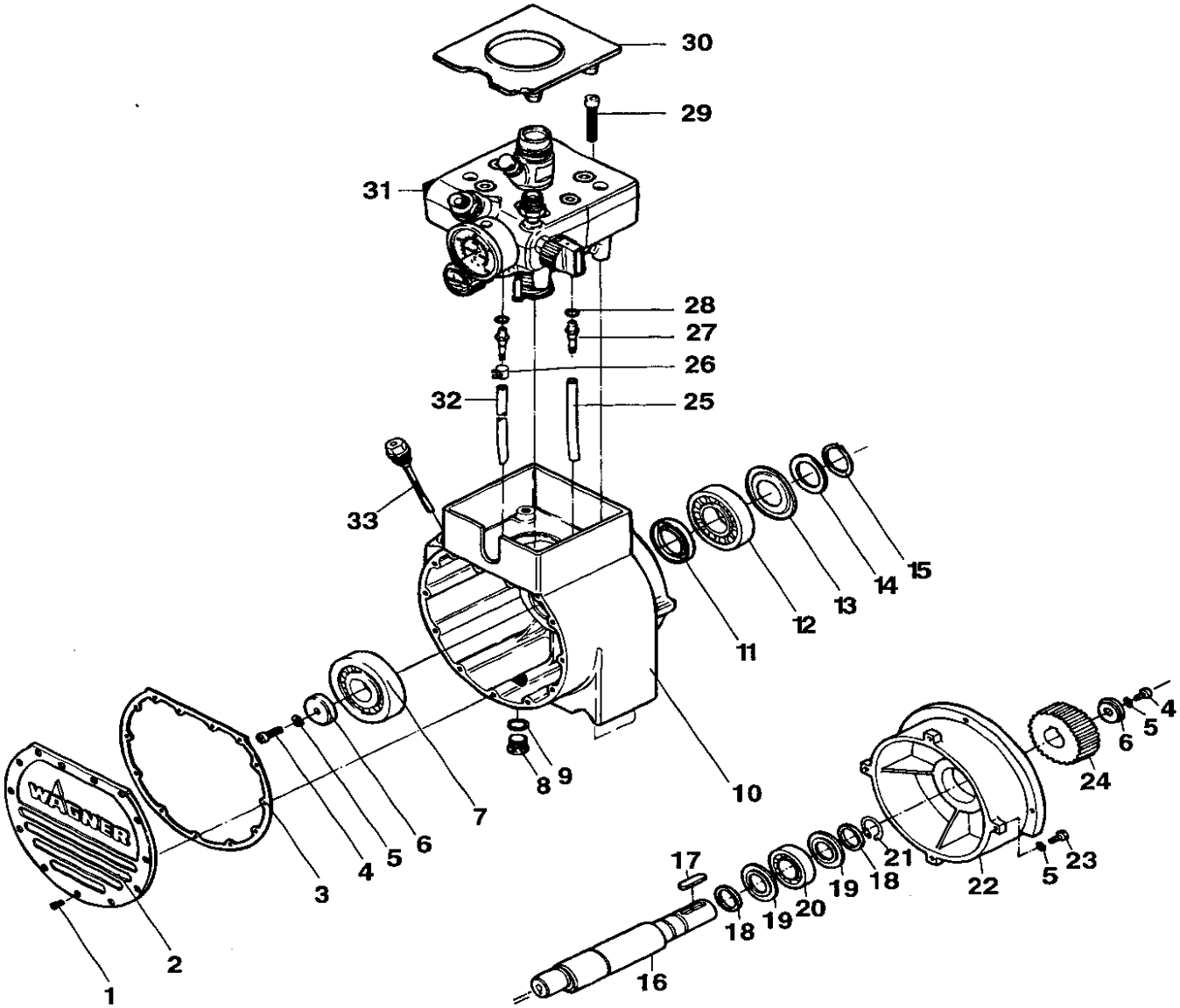

Spare parts list petrol engine with belt drive Finish 400 G / 500 G

Item	Order No. Finish 400 G	Order No. Finish 500 G	Description
1	9900 307	9900 307	Cheese-head screw M5x16 DIN 912 (2)
2	0194 326	0194 326	Touch-contact guard
3	0193 780	0254 780	HONDA petrol engine GX 160 K1 S1 C7
4	9931 026	9931 026	Feather key A5x5x32 DIN 6885
5	9900 118	9900 118	Hexagon screw M8x30 DIN 933 (4)
6	9921 501	9921 501	Spring washer A8 DIN 127
7	9920 102	9920 102	Washer A8.4 DIN 125
8	9900 362	9900 362	Cheese-head screw M 5x8 DIN 912
9	9921 505	9921 505	Spring washer B5 DIN 127
10	9950 325	9950 325	Earthing terminal, assy.
12	0038 930	0038 930	Earthing cable, assy., 6 m
13	0254 391	0254 391	Support housing
14	9902 112	9902 112	Cheese-head screw M8x20 DIN 6912 (4)
15	0194 376	0194 376	Toothed belt pulley
16	0169 366	0169 366	Retaining disc
17	9900 314	9900 314	Cheese-head screw M8x35 DIN 912 (4)
18	9986 230	9986 230	Toothed belt
19	9910 117	9910 117	Hexagon nut M16 DIN 934
20	0194 322	0194 322	Eccentric bolt
21	9900 102	9900 102	Hexagon screw M8x12 DIN 933 (2)
22	9994 801	9994 801	Round bearing (6)
23	9920 301	9920 301	Washer 8.4 DIN 9021 (4)
24	9900 326	9900 326	Cheese-head screw M8x16 DIN 912 (6)
25	9903 324	9903 324	Screw EM 5x16 (5)
26	0194 319	0194 319	Cover plate

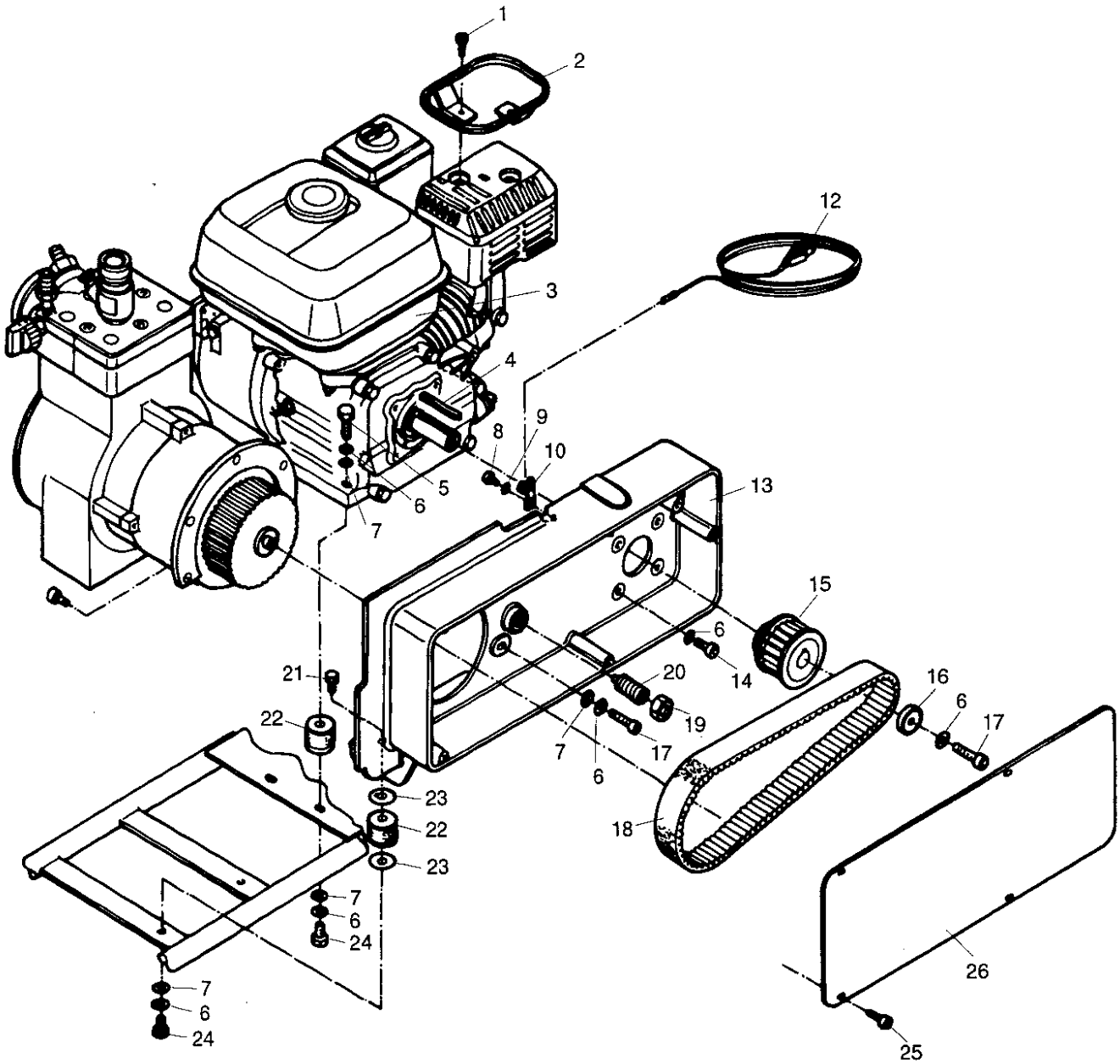

Spare parts list for 20 l hopper

Item No.	Order No.	Description
1	0097 064	Hopper set 20 l
2	0097 269	Hopper without cover
3	0097 270	Cover, assy.
5	9902 306	Slotted pan-head tapping screw
6	0097 521	Coarse filter disc
7	9922 609	Snap ring
9	0037 776	Compression spring
10	9941 509	Ball D 30
13	0097 272	Return hose, assy.
15	0097 271	Adaptor
16	0037 756	Valve support
17	9971 065	O-ring 44 x 3
19	0097 522	Hopper support

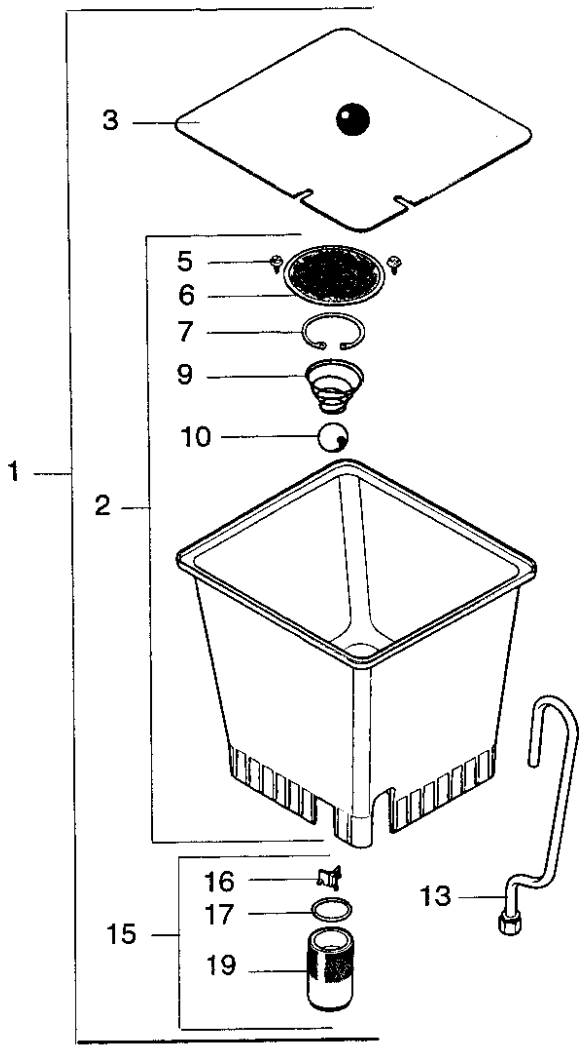

Spare parts list trolley

Item No.	Order No.	Description
2	0194 264	Trolley frame
4	9990 554	Protective cap
5	9930 301	Split-pin
6	9920 701	Washer
7	0055 580	Wheel
	0055 585	Hose
	0055 584	Wheel casing
	0055 583	Valve
10	9932 016	Clamping sleeve
11	9994 904	Steering castor with lock
12	0194 265	Full floating axle
13	9995 304	Spring fixture
16	0055 553	Cleaning tank
19	9910 204	Hexagon nut
21	0013 805	Ring
22	9900 325	Cheese-head screw

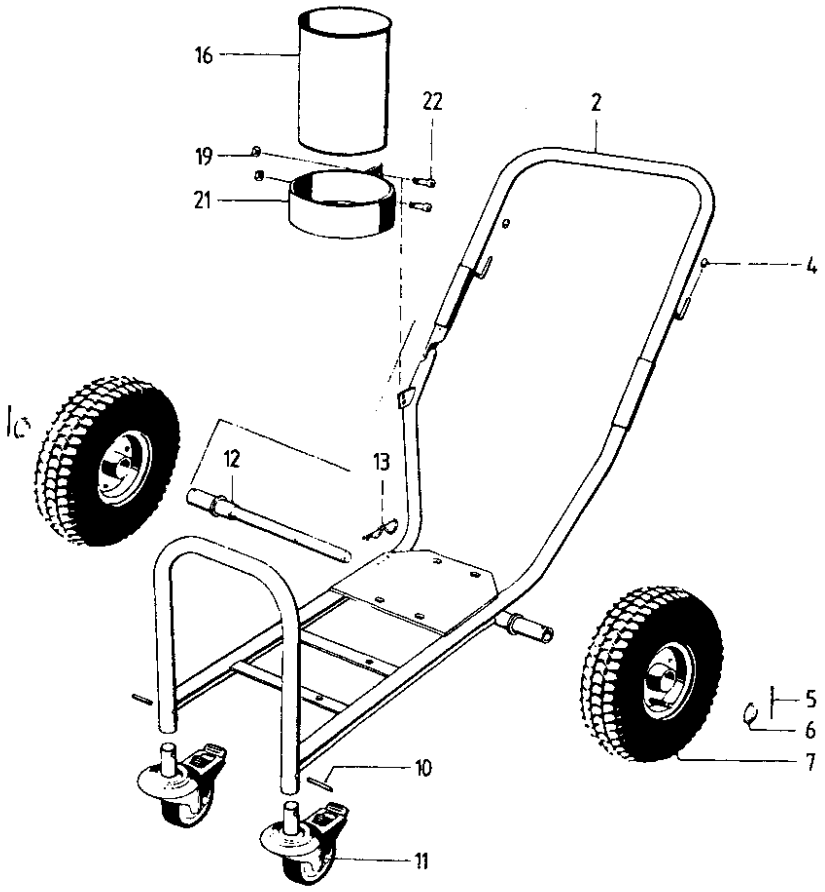

Spare parts list
Suction system for paint

Item No.	Order No.	Description
1	0034 660	Suction system, assy. (paint)
2	0034 666	Induction hose, assy.
3	0229 209	Filter bowl, assy.
5	0229 320	Filter bowl
6	0029 604	Filter disc D 83, 75 mesh, mesh width 0.2 mm
7	0029 605	Filter disc D 87, 40 mesh, mesh width 0.4 mm
9	0047 825	Circlip
10	0034 633	Return hose, assy.

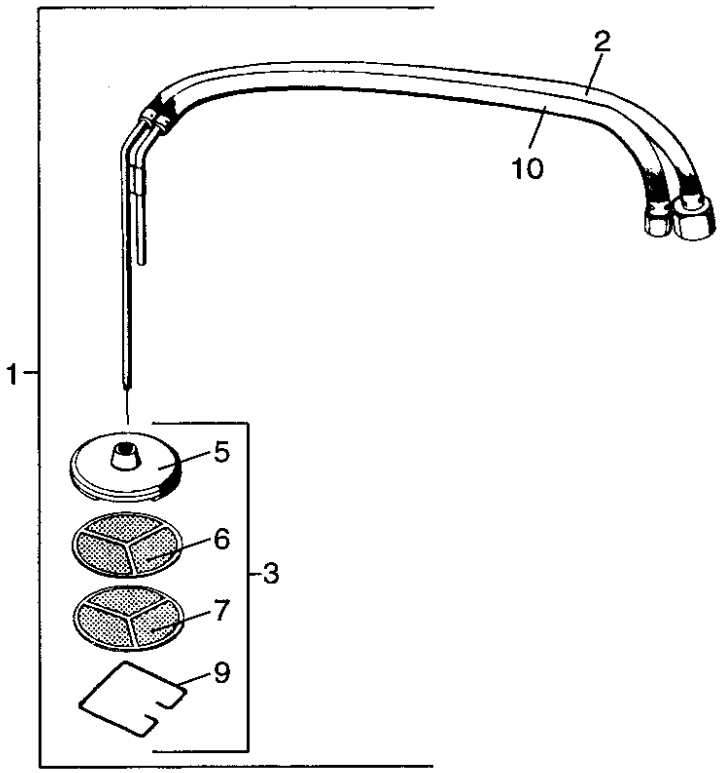

Spare parts list
Suction system for dispersion

Item No.	Order No.	Description
1	0146 210	Suction system, assy. (dispersion)
2	0146 211	Induction hose, assy.
4	0036 580	Bag-type strainer, assy.
5	0036 581	Bag-type strainer
6	0036 586	Filter screen pipe, 20 mesh, mesh width 0.8 mm
	0036 585	Filter screen pipe, 40 mesh, mesh width 0.4 mm (Special accessory)
7	0036 582	Bag-type strainer base
10	0146 212	Return hose, assy.
11	0146 213	Hose, assy.
12	0055 745	Angled return pipe, assy.

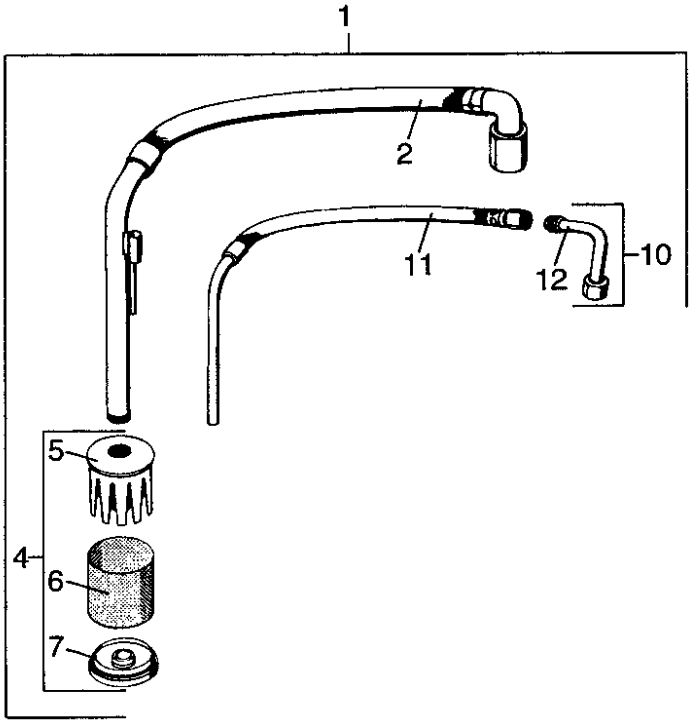

Accessories for Finish 400 G / 500 G

Item No.	Order No. Finish 400 G	Order No. Finish 500 G	Description
1	0161 002	0161 002	High-capacity spray gun G-10-1 N
2	0096 004	0096 004	Pole gun 30 cm
	0096 019	0096 019	Pole gun 100 cm
	0096 005	0096 005	Pole gun 150 cm
	0096 006	0096 006	Pole gun 270 cm
3	0217 001	0217 001	High-capacity spray gun G 530
4	----------	----------	Tips and gun accessories, see Pages 22/23
5	0248 001	0248 001	Airless roller AR 70
6	9984 501	9984 501	High-pressure hose DN 6 mm, 15 m, for dispersion
	9984 474	9984 474	High-pressure hose DN 6 mm, 10 m, for dispersion
	9984 417	9984 417	High-pressure hose DN 6 mm, 10 m, for paints
	9984 497	9984 497	High-pressure hose DN 4 mm, 7.5 m with stainless steel nipple
7	0034 030	0034 030	Coupling for high-pressure hoses
8	0034 075	0034 075	Distributor for connection of 2 spray guns
9	0115 363	0115 363	Relief valve for high-pressure filter
10	0070 212	0070 212	High-pressure filter 200/0.085 mm
	0070 316	0070 316	Filter insert, 250 mesh, mesh size 0.060 mm
	0070 317	0070 317	Filter insert, 200 mesh, mesh size 0.085 mm
	0070 344	0070 344	Filter insert, 100 mesh, mesh size 0.16 mm
	0070 326	0070 326	Filter insert, 70 mesh, mesh size 0.22 mm
11	0070 663	0070 663	Assembly set
	0070 216	0070 216	Distributor, assy.
	9984 498	9984 498	High-pressure hose
12	0097 064	0097 064	Hopper 20 liters
13	0070 210	0070 210	Hydraulic accumulator, assy.
14	0034 660	0034 660	Suction system for paint
15	0146 210	0146 210	Suction system for dispersion
16	0250 204	0250 204	Hopper set 5 l
17	0013 830	0013 830	Tank fixture
18	0097 035	0097 035	Hose reel (max. 40 m high-pressure hose)
19	0253 779	0254 775	Replacement pump head, assy.

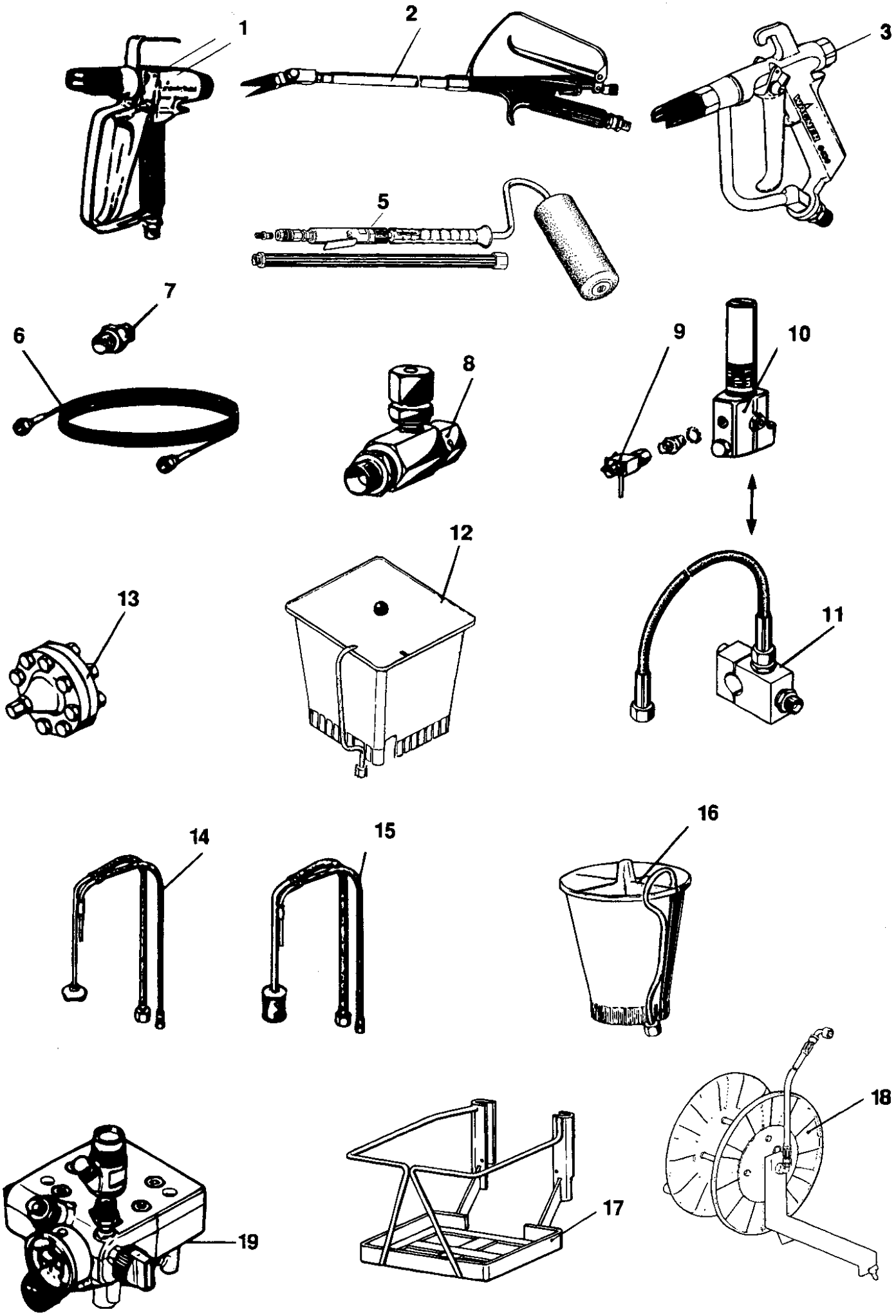
1
2
3
5
7
6
8
9
10
12
13
11
14
15
16
18
19
17