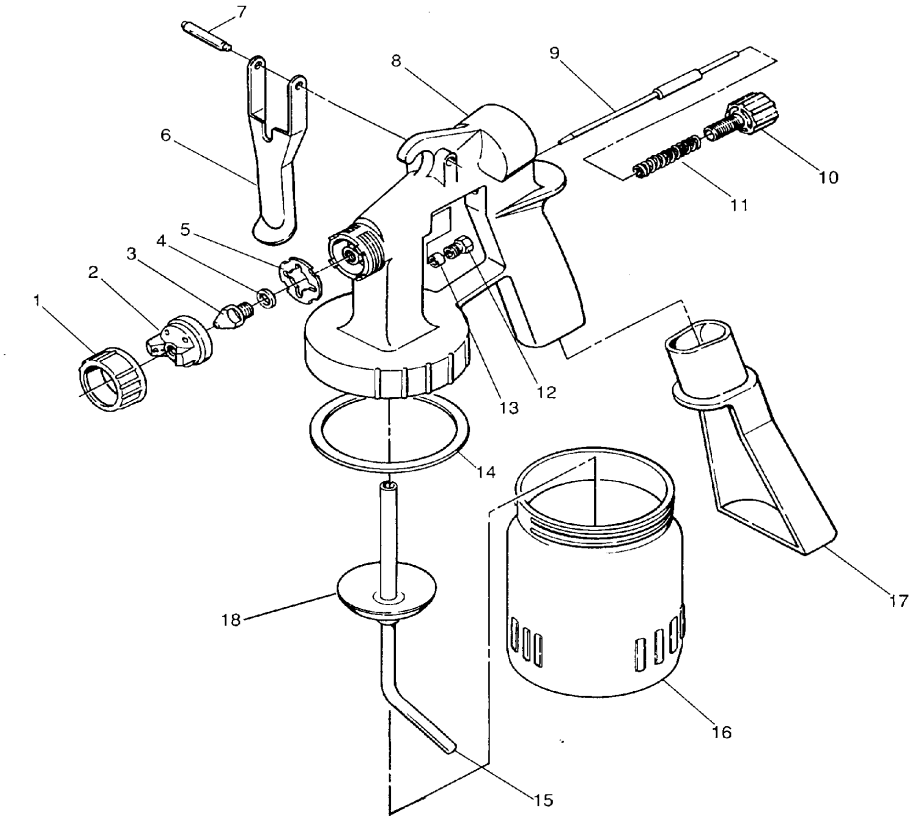

Item	Part No	Description	Item	Part No	Description
1	0276313	Retaining Ring (Fine Thread)	11	0276305	Spring
	0276485	Retaining Ring (Course Thread)	12	0276316	Packing Nut
2	0276340	Air Cap	13	0276308	Packing
3	0276231	Fluid Nozzle(Needle Nozzle Kit)	14	0337345	Cup Gasket
4	0276311	Washer	15	0276201	Suction Tube Assy
5	0276306	Diverter	16	0276314	Cup
6	0276312	Trigger	17	0276399	Gun Stand
7	0276319	Trigger pin	18	0276322	Cup Valve
8	0276301	Gun Body			
9	0276231	Fluid Needle(Needle Nozzle Kit)		0276200	Gun Assy Complete
10	0276220	Knob			

Item 1 Retaining Ring comes in two different threads.

Items 3 & 9 available in kit only.

ACN 005 328 709 ©2001 Wagner Spraytech Australia Pty Ltd