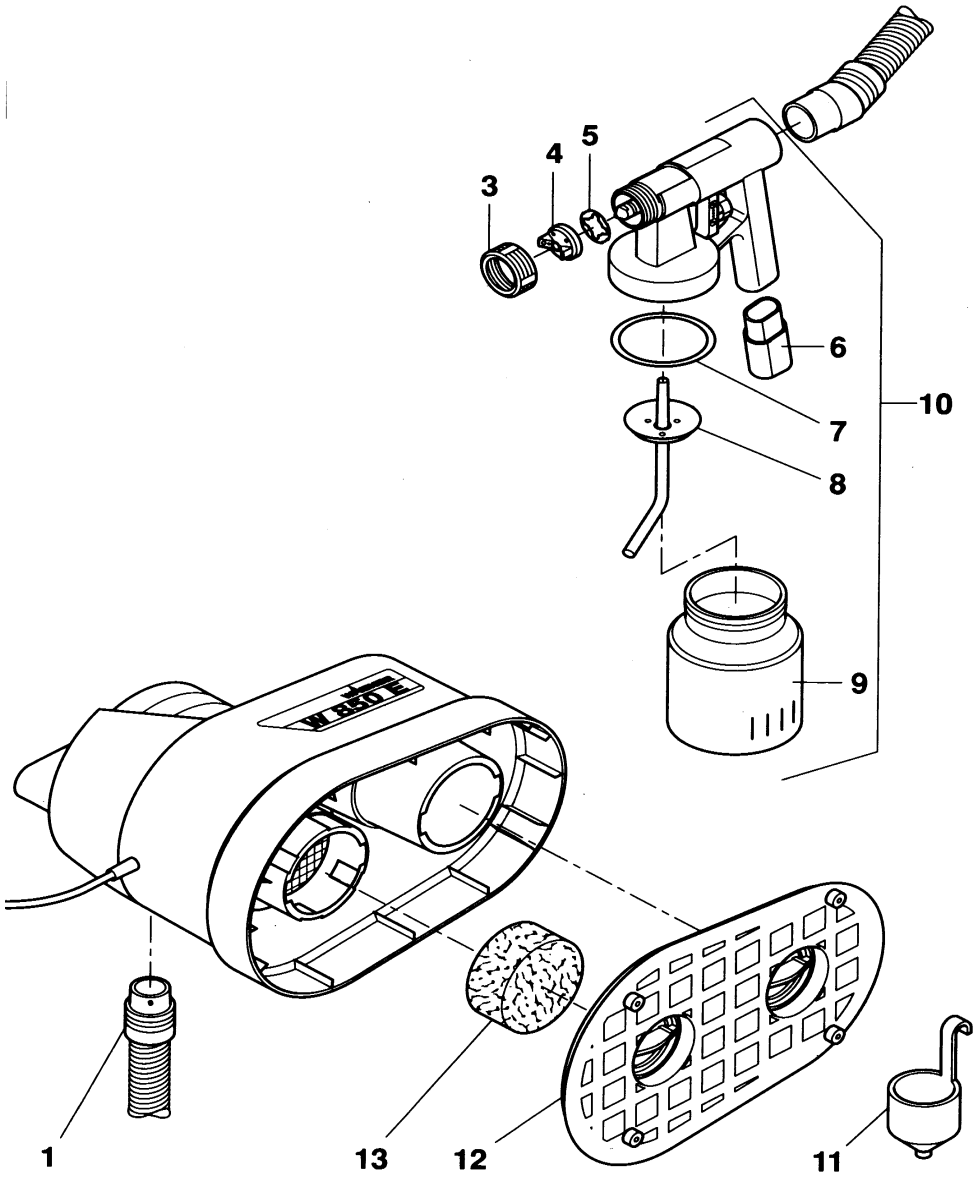

Item	Part No	Description	Item	Part No	Description
1	0336252	Air Hose	8	0336313	Ascending pipe
3	0337319	Unit Nut	9	0336323	Container
4	0336330	Air Cap	10	0336251	Gun Assy Complete
5	0337338	Air Diffuser	11	0050342	Viscosity Cup
6	0336336	Foot	12	0336201	Cover
7	0337345	Cup Seal	13	0276339	Air Filter

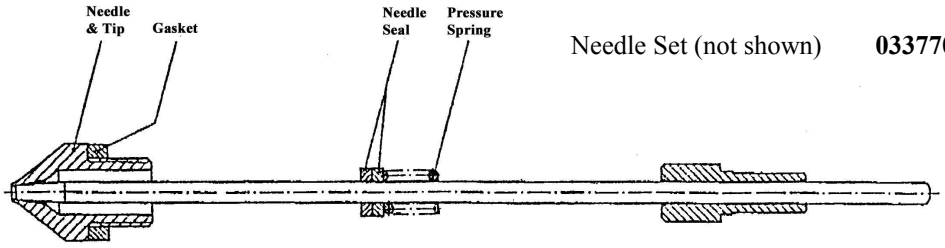

Needle Set (not shown) **0337704**

ACN 005 328 709 ©2001 Wagner Spraytech Australia Pty Ltd