WAGNER

Operating manual

High pressure airless spraying equipments pneumatically powered

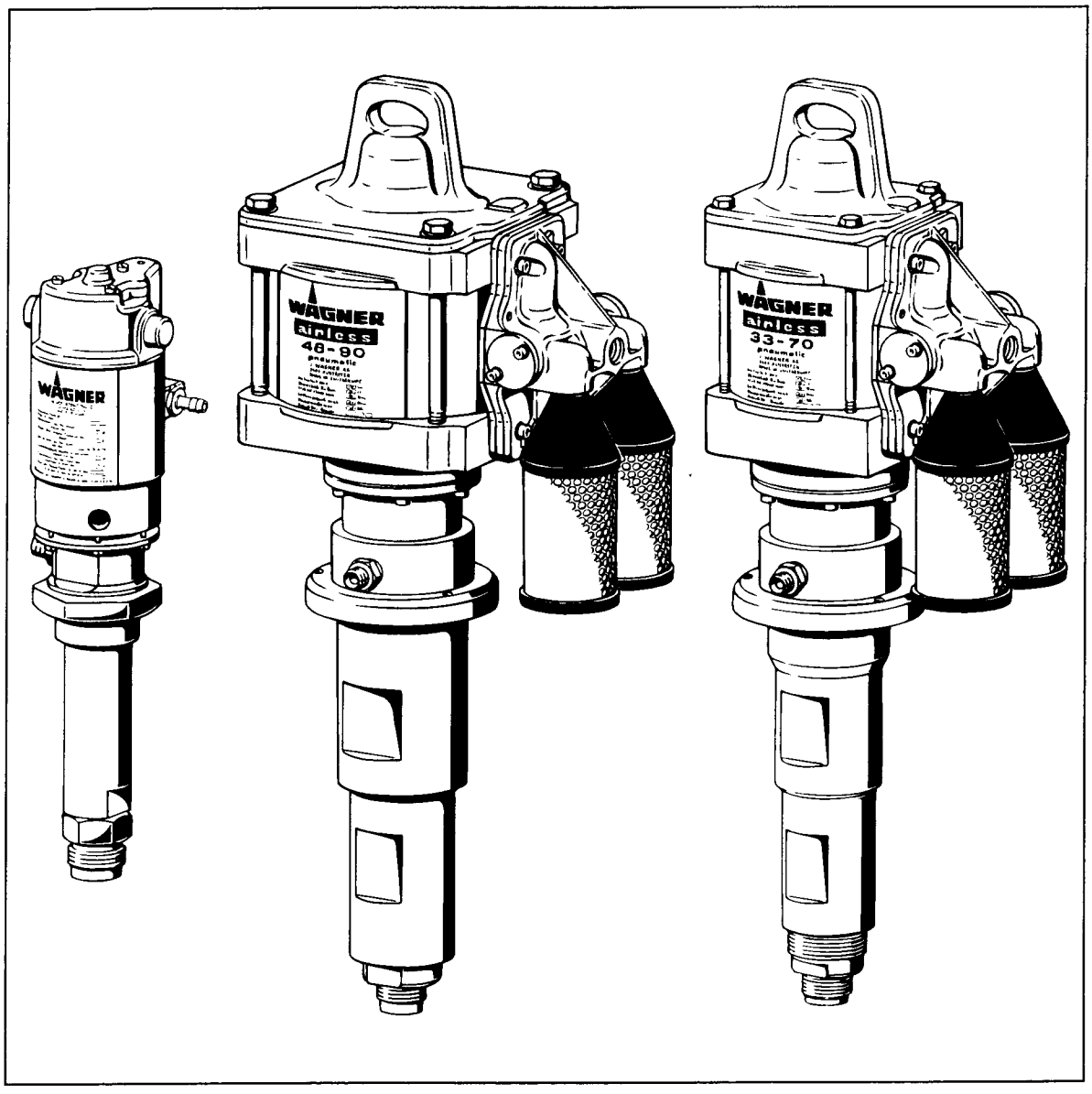

28-14 24-90 48-90 33-70 66-70

Edition 07 / 97 GB

0111 861

Warning!

Airless spraying systems produce extremely high spraying pressures.

Never allow fingers, hands or any other part of the body to contact the spray fan. Serious injury may result from such action

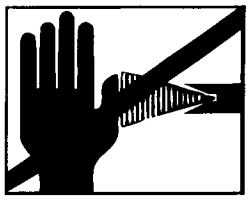

Never point the gun at yourself or any other person!

1

Warning: Risk of injury by injection!

In case of skin injury by paints or solvents, immediately consult a doctor and inform him of the paint or solvent you have used

2

Before start-up, carefully read the operating manual and take the following measures:

1. Lock the spray gun with trigger lock.
2. Observe the admissible working pressures.
3. Check all connecting parts for tightness.

3

The instructions for regular cleaning and maintenance of the system must be strictly adhered to.

Before starting any maintenance work on the system, and during breaks the following rules must be observed:

1. Relieve pressure from spray gund and hose.
2. Secure the spray gun with trigger lock.
3. Disconnect or switch off air supply.

Be safety-conscious!

Contents

	Page
Introduction into spraying with Airless units	2
Model range specialist applications	2
Spray materials suitable for use with individual models	2/3
Model specifications	3
Material flow volume, air flow volume and material pressure graph	4/5/6
Spraying medium	6
Filtering the medium, viscosity, two-component materials,	6
materials unsuitable for spraying from these units	6
Filters	7
Suction filter, high-pressure filter, gun filter insert	7
Operation of units	7
Sectional view	8
Safety precautions for airless spraying	9
Air motor	10
Service unit	10
General remarks	10
Material feed pump	10
Start up	11
Spraying technique – general	12
High-capacity spraygun	12
High-pressure hose	12
High-pressure hose handling	12
Hose-table	12
Down-times	12
Dismantling and cleaning	13
Care and maintenance	13
Malfunction checklist	14
Recoil force diagramm for airless spray tips	15
Spray tip selection	15
Spray tip selection chart	16
Flow volume chart	17
Servicing and cleaning instructions for airless flat-jet tips	17
Spare parts list 28-14 with view	18/19
Spare parts list air motor 24-90, 48-90 and 33-70, 66-70 with view	20/21
Spare parts list material feed pump 33-70 and 66-70 with view	22/23
Spare parts list material feed pump 24-90 and 48-90 with view	24/25
Accessories for spraying-equipment pneumatically powered 28-14 with view	26/27
Accessories for spraying-equipments pneumatically powered 24-90, 33-70, 48-90 and 66-70 with view	28/29
WAGNER after-sales service points	32
Important notes on product liability	33
Guarantee declaration	33

Introduction into spraying with Airless units

Compressed air has long been widely used as a source of power throughout industry and the range of applications continues to widen. In the paint spraying industry, compressed air has been employed for decades to atomize the medium. However, this method has many disadvantages, such as heavy paint mist, low working speeds, high material losses and unwieldy handling. That is why designers have endeavoured to develop a paint spraying system which, though powered by air, atomizes the medium by an airless method to eliminate these drawbacks and meet modern demands for efficiency and productivity.

In the airless system, a piston or diaphragm pump sucks the spraying medium directly from the container and drives it through a special tip. Due to the narrow cross section of this tip, a theoretical pressure dependent on pump type up to 528 bar (7.656 psi) builds up, sufficient for micro-fine atomization of the medium without the use of air – hence the name „airless spraying". Advantages of this method include atomization into micron particles, elimination of virtually all paint mist and fogging, mirror-smooth surface, free from bubbles. It also speeds up the work considerably and the equipment is much easier to handle.

Model range specialist applications

28-14

Joinery shops
Industry: preservation work
Filling stations: undersealing
Plumbers: pressure-testing piping
Synthetic foam production: mould release agents

24-90, 33-70 and 66-70

Furniture industry
Window manufacture
Commercial paint shops
Chair manufacture
Industrial painting with two sprayguns
Saw-mills: impregnation
Machine shops
Dye manufacture
Synthetic foam production: surface coating

48-90

Structural steel applications
Shipbuilding
Material feed systems for industry
Machine shops: special coatings
Vehicle manufacture: commercial vehicles
Container manufacture
Transmission manufacture
Agricultural machinery manufacture

Spray materials suitable for use with individual models

28-14

Solvent based paints with fine pigments
Spray primers, fillers and undercoats
Primers and wash primers
Water-based paints
Polychrome- and embossing-effect paints.
Epoxy and polyurethane paints, phenolic resin lacquers
Polyester lacquers, oils
Wax-based underseal

24-90

Solvent based paints with fine pigments
Spray primers, fillers and undercoats
Primers and wash primers
Iron oxide paints, inorganic zinc, iron mica paints
Polychrome- and embossing-effect paints.
Epoxy and polyurethane paints, phenolic resin lacquers
Polyester lacquers, oils, chlorinated rubber compounds
Liquid synthetic materials
Wax-based underseal
Bituminous materials
High solids coatings and compounded or non-compounded emulsions

33-70

Solvent based paints with fine pigments
Spray primers, fillers and undercoats
Primers and wash primers
Water-based paints
Iron oxide paints, inorganic zinc, iron mica paints
Polychrome- and embossing-effect paints.
Epoxy and polyurethane paints, phenolic resin lacquers
Polyester lacquers, oils, chlorinated rubber compounds
Liquid synthetic materials
Wax-based underseal
Bituminous materials and compounded or non-compounded emulsions

48-90

Solvent based paints with fine pigments
Spray primers, fillers and undercoats
Primers and wash primers
Water-based paints
Iron oxide paints, inorganic zinc, iron mica paints
Polychrome- and embossing-effect paints.
Epoxy and polyurethane paints, phenolic resin lacquers
Polyester lacquers, oils, chlorinated rubber compounds
Liquid synthetic materials
Wax-based underseal
Bituminous materials
High solids coatings and compounded or non-compounded emulsions

66-70

Solvent based paints with fine pigments
Spray primers, fillers and undercoats
Primers and wash primers
Water-based paints
Iron oxide paints, inorganic zinc, iron mica paints
Polychrome- and embossing-effect paints.
Epoxy and polyurethane paints, phenolic resin lacquers
Polyester lacquers, oils, chlorinated rubber compounds
Liquid synthetic materials
Wax-based underseal
Bituminous materials
High solids coatings and compounded or non-compounded emulsions

Model specifications

	28–14
Transmission ratio	28 : 1
Flow volume per dual stroke	14 cm^3
Max. recommended No. of (dual) strokes	85/min
Max. delivery	2,6 l/min
Max. air inlet pressure	8 bar
Air consumption at 6 bar per dual stroke	3 l
Max. working pressure	224 bar/3.248 psi

	24–90	33–70
Transmission ratio	24:1	33:1
Flow volume per dual stroke	90 cm^3	70 cm^3
Max. recommended No. of (dual) strokes	85/min	85/min
Max. delivery	16,5 l/min	12,6 l/min
Max. air inlet pressure	8 bar	8 bar
Air consumption at 6 bar per dual stroke	15,3 l	15,3 l
Max. working pressure	192 bar/2.784 psi	264 bar/3.828 psi

	48–90	66–70
Transmission ratio	48:1	66:1
Flow volume per dual stroke	90 cm^3	70 cm^3
Max. recommended No. of (dual) strokes	85/min	85/min
Max. delivery	16,5 l/min	12,6 l/min
Max. air inlet pressure	8 bar	8 bar
Air consumption at 6 bar per dual stroke	25,3 l	25,3 l
Max. working pressure	384 bar/5.568 psi	528 bar/7.656 psi

Das Gerät ist nicht nach der Richtlinie 94/9/EG (ATEX) gebaut und darf daher nicht in Betriebstätten benutzt werden, welche unter die Explosionsschutz-Verordnung fallen.

The unit was not built according to the 94/9/EC (ATEX) guidlines and thus may not be used in workplaces falling under the explosion-protection ordinance.

Material flow volume, air flow volume and material pressure graph to DIN 24 374, measured with water

Reading example

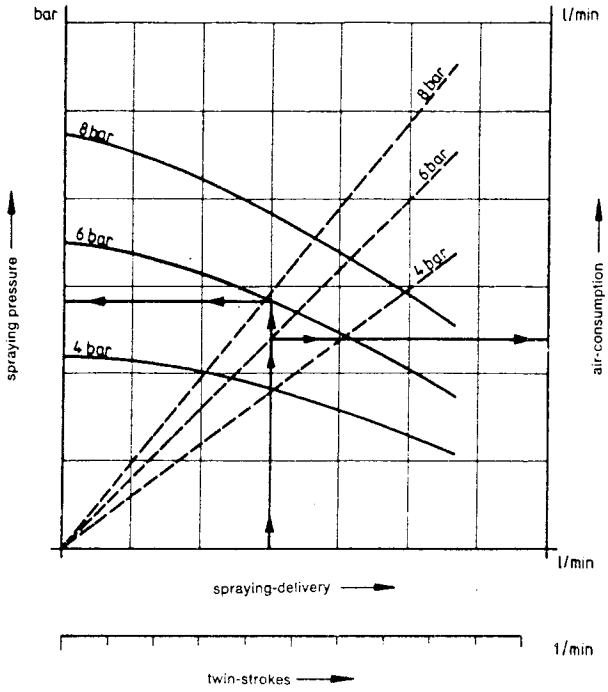

AIRLESS-Pneumatic 28-14

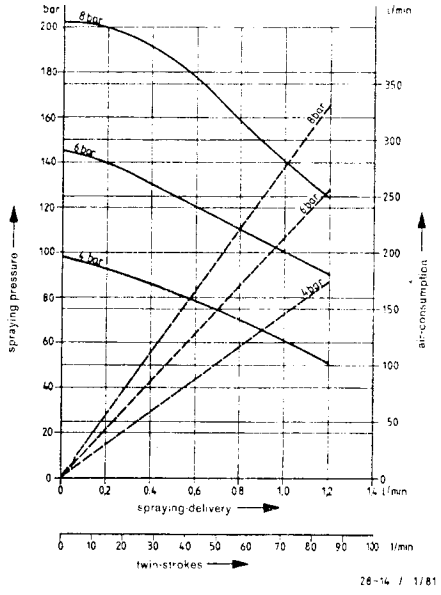

AIRLESS-Pneumatic 24-90

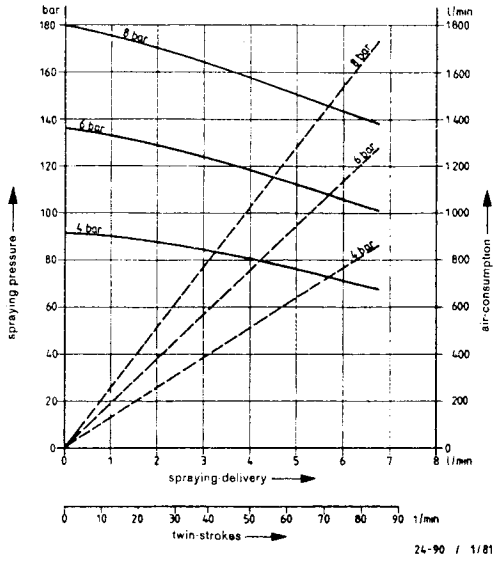

Material flow volume, air flow volume and material pressure graph to DIN 24 374, measured with water

AIRLESS-Pneumatic 33-70

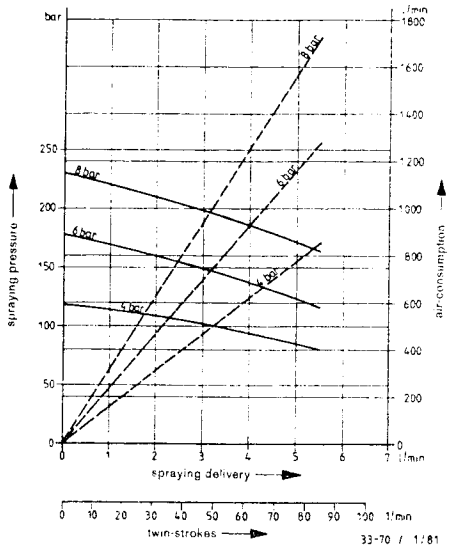

AIRLESS-Pneumatic 48-90

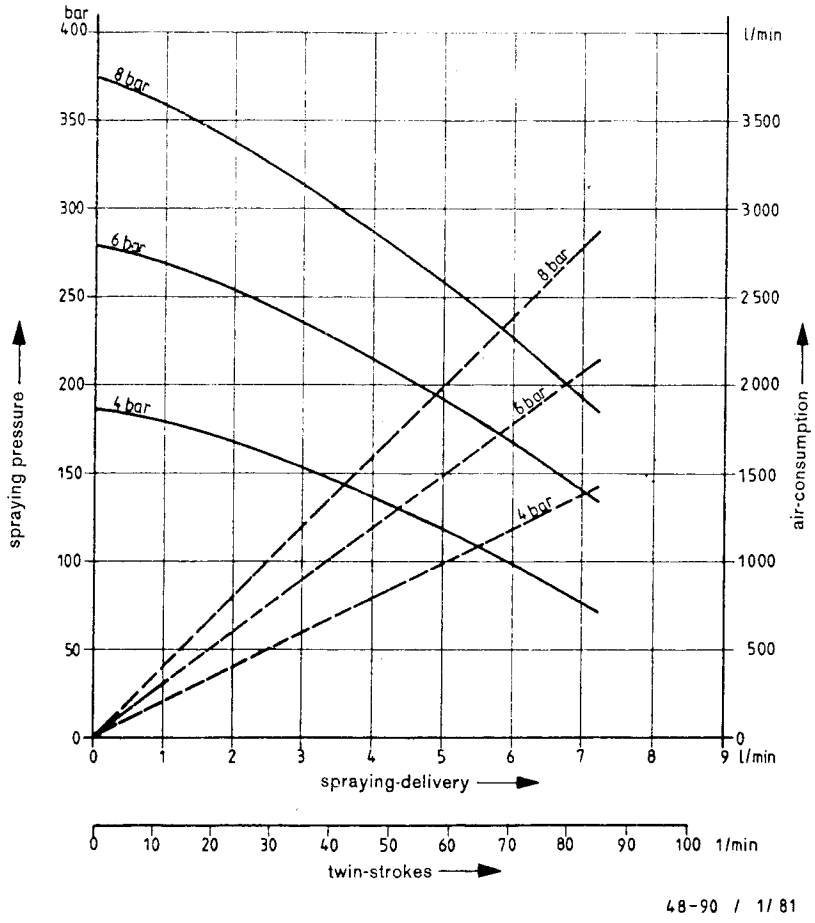

Material flow volume, air flow volume and material pressure graph to DIN 24 374, measured with water

AIRLESS-Pneumatic 66-70

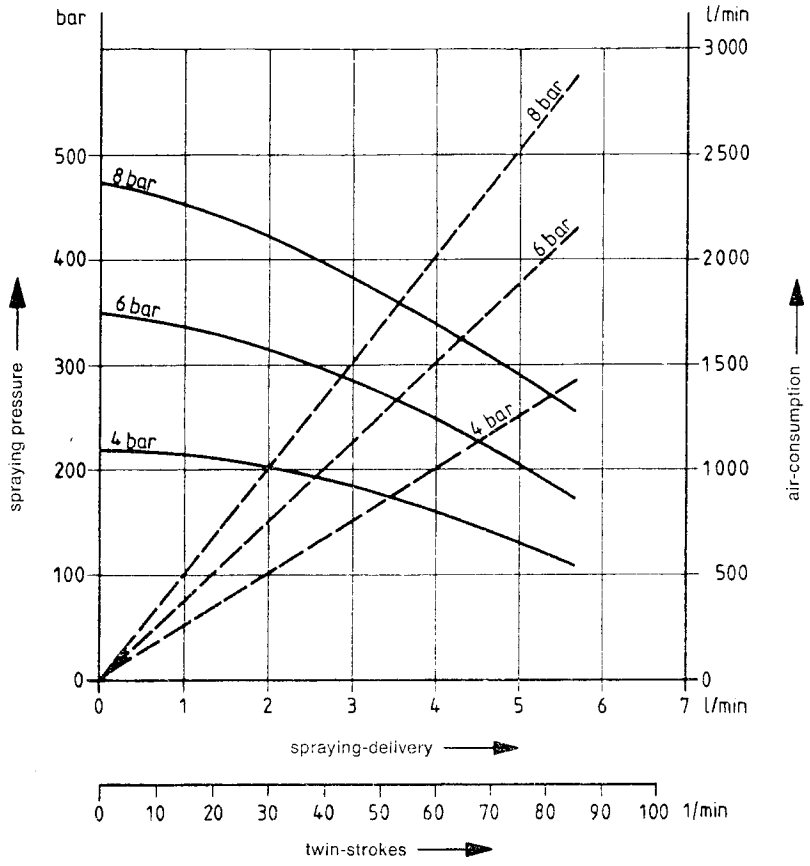

Spraying medium

Filtering

Each unit is fitted with a suction and a gun filter (G-10-1 N), as optional extra also a high-pressure filter with several different elements, so that the medium is efficiently filtered inside the appliance. It will, therefore, not generally be necessary to run the medium through a separate filter before use.

Viscosity

The equipment has very good suction properties; nevertheless, when handling highly viscous material, it is advisable to keep the suction system as short as possible.

Viscosity alone does not determine the required pressure for spraying. Some materials classified as liquid still need high pressure for airless atomization.

Two-component media

Strictly observe specified pot life. Within this time limit, the equipment, too, must be cleaned and flushed through with great care and the appropriate thinner. The best method is to let it clean itself in a closed circuit.
Spraying medium residues must not remain in pump or filters.

Unsuitable materials

The pump is not designed to handle grainy and highly corrosive materials, containing large, sharpedged pigment particles and media containing acids. Abrasive pigments, above all, are liable to wear pump, valves and packings, gun and spray tip and substantially shorten the life to these components.

Wear of pump, gun and spray tip due to abrasive materials are not covered by the guarantee.

These include the following, among others:

Various adhesives; dispersion and contact adhesives; various chlorinated rubber or similar materials; plaster-like renderings; colours filled with coarse fibres; some polychrome-effect paints.

Filters

Suction filter. Make sure to re-fit the element carefully after cleaning and do not damage it.

Always select a filter to match the medium sprayed.

28-14

For all enamels:	0.4 mm mesh
For base coats:	0.8 mm mesh

24-90, 48-90, 33-70, 66-70

For all enamels:	0.2 mm mesh
For base coats:	0.4 mm mesh
For emulsion paints:	0.8 mm mesh

High-pressure filter (available as accessories)
This fine filter takes various elements, always matched to the spray tip fitted.

28-14

For tip bores below 0.28 mm/.011 in
Mesh gauge 0.085 mm = 200 mesh

For tip bores above 0.28 mm/.011 in
Mesh gauge 0.1 mm = 150 mesh
or
Mesh gauge 0.16 mm = 100 mesh

For tip bores above 0.38 mm/.015 in
Mesh gauge 0.22 mm = 70 mesh

Part No. see page 26, pos. 8.

24-90, 48-90, 33-70, 66-70

For tip bores below 0.23 mm/.009 in
Mesh gauge 0.060 mm = 250 mesh

For tip bores below 0.28 mm/.011 in
Mesh gauge 0.085 mm = 200 mesh

For tip bores above 0.28 mm/.011 in
Mesh gauge 0.16 mm = 100 mesh

For tip bores above 0.38 mm/.015 in
Mesh gauge 0.22 mm = 70 mesh

For tip bores above 0.53 mm/.021 in
Mesh gauge 0.36 mm = 45 mesh

Part No. see page 28, pos. 7.

Attention: When spraying filler-loaded media, work without high-pressure filter element.

Before working on the high-pressure filter, ensure that the compressed air supply is disconnected and the equipment is off load.

Thoroughly clean the filter, daily for preference, but not later than every 50 duty hours. Check in particular that all threads are free from paint residue.

This element is fitted rolled up and loosely into its casing. By rolling it more tightly, it is easily taken out for cleaning.

Do not forget to fit the loosely inserted compression spring (depending on type) in re-assembly.

Important:

The use of an unsuitable filter element may block the high-pressure filter. The equipment will stop and the flow of paint cease. If this happens, the filter case should not be unscrewed while it is under pressure.

First release the pressure, using the spraygun or the relief valve if fitted.

Then pump through an appropriate solvent to release paint residue and dirt in the filter and to clean it.

Insert filter in spraygun G-10-1 N

These filters are of a very fine mesh and should therefore be cleaned frequently. The precise frequency will depend on the grain size of the pigment used in spraying. A large grain size will obviously tend to block the filter more rapidly than a smaller one.

Operation of units

Compressed air is fed to the air motor. Compressed air enters by way of the control piston and passes into the cylinder chamber below the piston in the air motor. The piston in the air motor moves upwards with the material feed pump piston. The inlet valve opens and the material to be sprayed is drawn in.

The upward movement of the piston in the air motor reverses the direction of the compressed air.

Compressed air now flows past the control piston into the cylinder chamber above the piston in the air motor. Simultaneously, the compressed air flows outwards from the chamber under the piston in the air motor.

The piston in the air motor is moving downwards together with the material feed pump piston; the outlet valve opens and the material is forced out under pressure.

When the air motor piston is in its lower position, the direction of the compressed air is reversed and the upwards movement starts again.

The piston pump being of the double-acting type, paint is delivered at each upwards and downwards stroke. This reciprocal movement is continuously repeated.

The fast reversing movement of the control piston ensures that the air motor piston reverses in the end positions very rapidly. The pressure drop at the feed pump is very slight.

Sectional view
(Illustration 28-40)

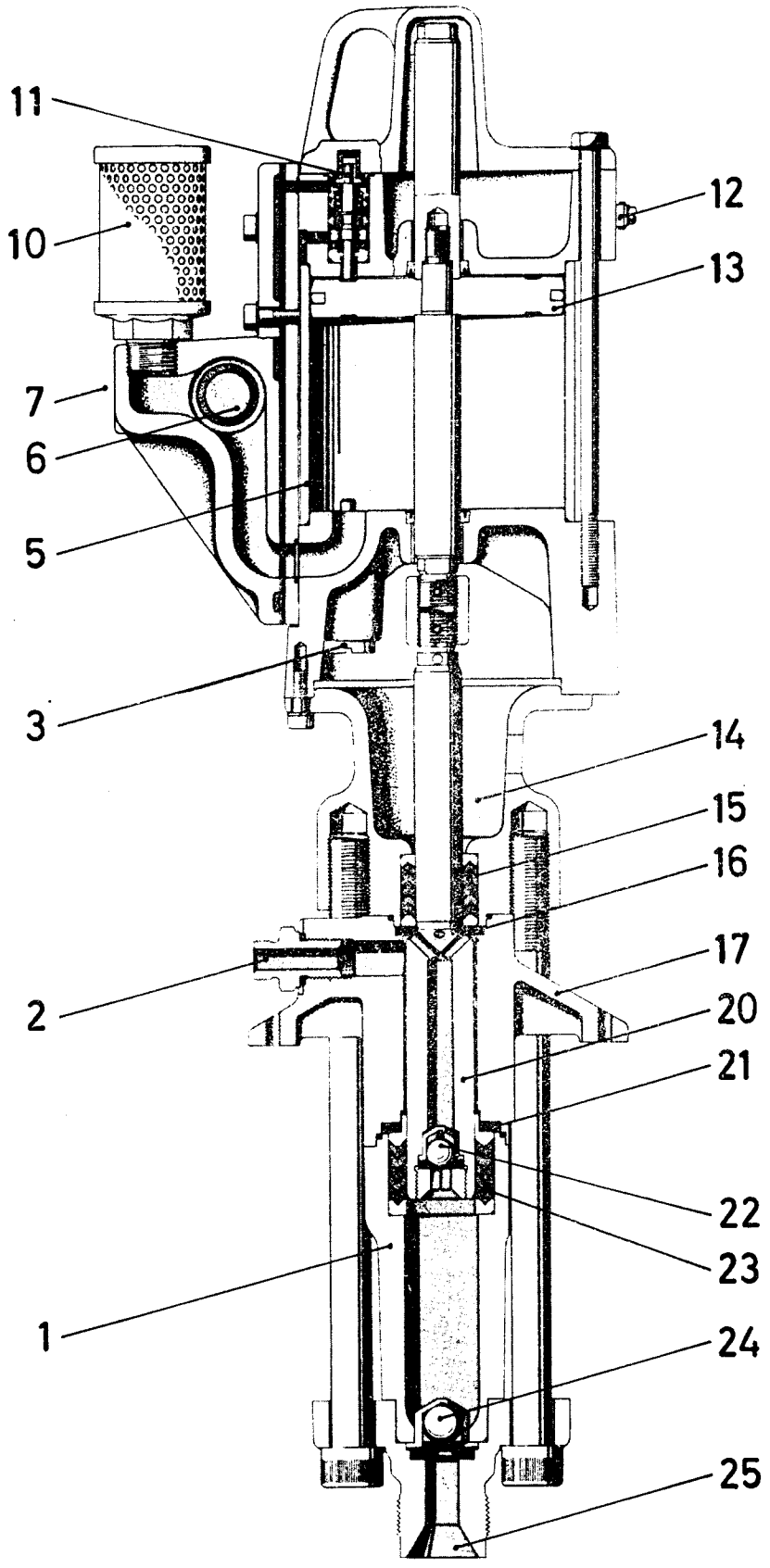

Abbildung 28-40

1. Material feed pump
2. Material outlet
3. Lower control valve
5. Air motor
6. Control piston
7. Air inlet
10. Silencer air outlet
11. Upper control valve
12. Earthing rod
13. Piston
14. Separating oil chamber
15. Upper seal
16. Spring loading for packings
17. Flange
20. Pump piston
21. Spring loading for packings
22. Outlet valve
23. Lower seal
24. Inlet valve
25. Material inlet

Safety precautions for airless spraying

All local safety regulations in force must be observed.

The following points should also be noted carefully.

1. **To avoid the danger of the spraygun trigger being pulled inadvertently during stoppages, or when the tip is being changed, the gun should always be switched off at such times.**

   The spraygun should never be pointed by the operator towards either himself or another person.

   Fingers and hands should be kept well away from the jet. High spray pressures up to 528 bar/7.656 psi, depending on the model, can cause a serious accident without warning.

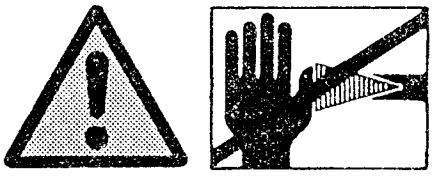

2. **The speed of material flow at high pressures may produce an electrostatic charge in the equipment.**
   This in turn can cause sparks or even ignition when discharged. To avoid this risk, care must always be taken prior to use to ensure that the equipment is properly earthed.

   If materials with a flash point below 21°C (cellulose paints, etc., in temperature groups G1-G3) are to be sprayed, an additional lead (potential equalization cable) must be provided between the material container and the equipment.

   Earthing cable and potential equalization cable (copper wire 4 mm²) must be connected to the earthing point on the air motor (see Accessories, page 26 and 28).

3. **Select a gun and high-pressure hoses matching the pressures building up in the system.**
   High-pressure hoses must have indelible markings, giving permissible service pressure, maker's name and date of manufacture. They must be constructed to give a resistance across coupling members of max. 1 Mega-Ohm.

4. **Cleaning**
   When cleaning the equipment, never spray paint back into a closed container.

   The rebound of the paint jet would trap air inside the container and so set up a potentially explosive gas/air mixture.

   The danger is particularly acute when working with materials having a flame point below 21 °C.

5. **Protective masks**
   Although the AIRLESS spraying method involves a minimum of paint mist, no spraying system is entirely free from it.

   AIRLESS spraying disperses very few paint particles into the surrounding atmosphere, but operators should still wear a mask for absolute protection.

6. **Extraction systems**
   There are as yet no universally valid regulations on extraction installations for working with AIRLESS spraying equipment, which is covered by the general rules on paint spraying. Even though the method largely eliminates paint mist, potentially hazardous solvent vapours must also be extracted, so that appropriate facilities should be provided.

Air motor

Service unit

The customer may opt for the compressed air to be fed to the motor either via the service unit (water separator, pressure controller and lubricator) or via a pressure controller or safety device.

Operating pressure must not exceed 8 bar.

Note

The spraying equipment is provided with a safety valve set at 8.2 bar. The valve is correctly set by the manufacturer and sealed. Any subsequent change in the setting must be properly authorized.

Description of safety features

At pressures in excess of the permissible operating pressure, the spring-loaded valve will open automatically to release the overpressure.

The oil mist lubricator should be filled with an anti-freeze additive and adjusted to 1 drop per double stroke. This rate can be checked through the sight glass. Next to the sight glass you will find an adjusting screw for regulating number of drops.

The anti-freeze provides essential lubrication for the seals and prevents freezing up to the silencer (air outlet). Freezing will obviously depend on ambient temperature, but can be largely inhibited by appropriate setting of the drop rate.

At very low temperatures – faster drop rate.

At temperatures around freezing – slower drop rate.

General remarks

All mechanical control members of the air motor are maintenance-free.

Almost all wear parts can be replaced from the top, i. e. without separating motor from material feed pump.

All parts are built for long life.

Material feed pump

The material feed pump is of piston design with integral, exchangeable inlet and outlet valves. It primes the paint via the suction system, comprising hose or pipe and filter. The piston runs in two fixed packings, self-adjusting by compression spring to give long life.

To keep wear to the minimum, the piston is hard chrome plated.

A further reduction of stroking frequency (dual strokes/min) extends equipment life correspondingly. In general, the most cost-efficient life is achieved when actual stroking frequency lies around half the max. recommended stroking rate.

In- and outlet valves are equipped with tungsten carbide seats. Various cuff packings can be fitted.

Compound seals (leather and Teflon), **Teflon seals, leather seals** – see Accessories, page 26 and 28.

Separating oil chamber

This is located above the upper seal.

Recommended separation oil, NUTO H 46 by ESSO/EXXON.

The oil serves both to lubricate the piston rod and to prevent „gumming". The chamber should be filled with separating oil to the level of the filling aperture.

Start up

1. Install the equipment. Fill separating oil chamber with separating oil (ESSO/EXXON NUTO H46) supplied with the equipment. The oil should be level with the filling aperture edge, see Fig.

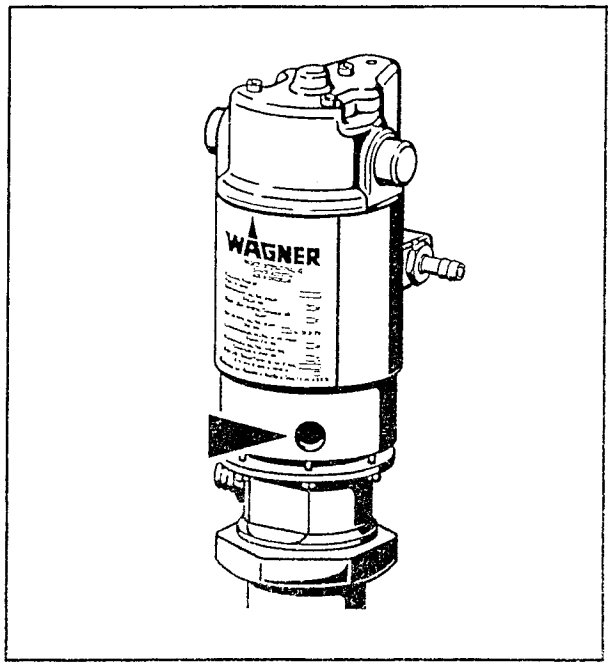

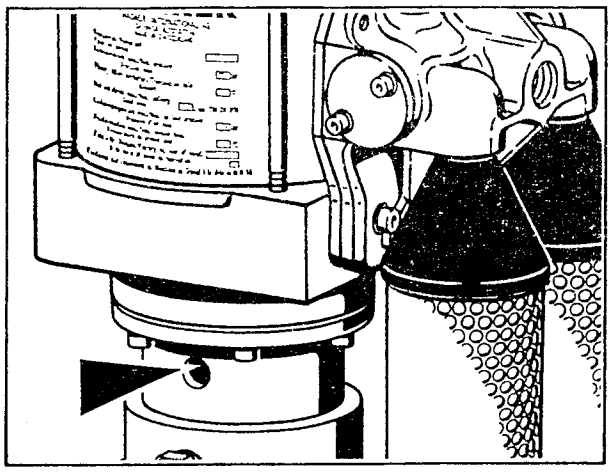

If the lubricant is neglected, seals will be subjected to additional wear, causing leakage and reduced performance.

2. Fill anti-freeze lubricant (ESSO/EXXON MILLCOT K68, part no. 9992 509, 250 ml) into filler on service unit.

3. Connect one end of the high-pressure hose to the airless spraygun and the other to material feedline.

4. Connect the air supply.

5. Immerse the suction system in a suitable thinner. Set 1-2 bar pressure on reducing valve. The pump will start up and begin to draw.

24-90, 48-90, 33-70, 66-70

Starting aid if start – up is not instantaneous – press pin, see Fig.

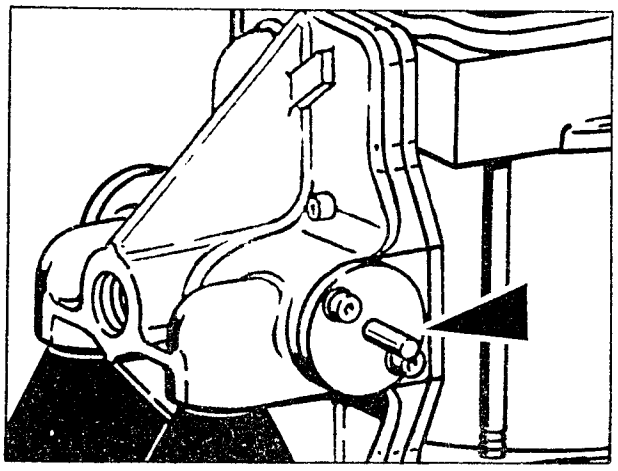

6. Open the relief valve on the equipment (if fitted). When thinner starts flowing from the outlet, close the relief valve. Pull the trigger on the gun and keep in this position until clean thinner is flowing from the spraygun. Where no relief valve is fitted, pull the trigger on the gun and keep in position until the equipment is ventilated and clean thinner starts flowing from the spraygun.

7. Switch off the gun and secure.

8. Remove suction system from thinner and immerse in prepared spray material.

9. Set desired pressure on the regulating valve. The equipment is now ready for operation.

Determination of working pressure
Multiply the set air pressure by the transmission ratio, e.g. WAGNER 66-70:

transmission ratio:	66:1
air inlet pressure:	8 bar
max. working pressure:	528 bar

10. These instructions should be strictly complied with each time the equipment is started up.

Spraying technique – general

High-capacity spraygun

It is important that the spraygun should be moved uniformly over the workpiece; otherwise the coating will be irregular. The spraying movement should be executed with the arm rather than with the wrist to ensure that the gun is held at a uniform distance of approx. 30 cm from the workpiece. The edge of the spray should not be too pronounced. The density of the spray should be allowed to fade gradually so that on the next pass it will be possible to overlap slightly.

The amount of mist will be minimised if the gun is kept parallel to the surface.

Note

If the jet is producing very sharp edges, either increase spraying pressure or add thinner to the spray material.

Clogged tips

See servicing instructions for airless tips on pages 17.

High-pressure hose

Hoses are designed for each model in conformity with pressure ranges and marked with max. pressure. The identification data also includes the name of the manufacturer and date of manufacture. The inside surface of the hose is highly resistant to wear, etc.
On grounds of safety, we recommend that only WAGNER original replacement hoses should be used.

High-pressure hose handling

Excessive bending or buckling of the hose should be avoided. The minimum bending radius is approximately 20 cm. The hose should be protected against contact with sharp objects or edges and should not be left where vehicles may pass over it.

Hose – table

Super high pressure hoses
for pressures up to **530 bar**

	Part No.
Rated diameter 6 mm, 10 m long union M 16 x 1,5	9984 420
Rated diameter 10 mm, 10 m long union M 16 x 1,5	9984 431
Rated diamter 10 mm, 10 m long union M 18 x 1,5	9984 430

High pressure hoses
for pressures up to **270 bar**

Rated diameter 4 mm, 5 m long union M 16 x 1,5	9984 402
Rated diamter 6 mm, 10 m long union M 16 x 1,5	9984 417

Down-times

When working with materials which dry on exposure to the air:

1. Disconnect compressed air
2. Spray the remaining material back into the material container, thereby depressurizing the equipment.
3. Leave the suction system immersed in spray material or place it in a suitable solvent. The suction filter and material feed pump should not be allowed to dry out.
4. Switch spraygun to off position.
5. If the tip is to be cleaned, see instructions on page 17.

Note

It will be necessary to clean the equipment immediately when a 2-component material has been used (see page 6).

Dismantling and cleaning

The equipment should be cleaned daily, thus ensuring that it will be ready for use immediately work starts the following day. In no circumstances should any paint left in the equipment be allowed to dry and harden. We recommend the implementation of a routine cleaning schedule which should be gone through at the end of work each day. The solvent used for cleaning should be chosen to suit the material sprayed.

1. Disconnect the compressed air.
2. Open the relief valve, if fitted.
   Where no relief valve is fitted, switch gun to „on" position.
   Drain spray material into material container, thus depressurizing equipment.
3. Clean the exterior of suction system.
4. Place suction system in a suitable solvent.
5. Turn spraygun to „off" position and strip and clean tip in accordance with instructions.
6. Switch the gun on without connecting the tip, and pull trigger to allow unused paint to flow into an open collecting container. Leave the gun in the „on" position.
7. Connect the compressed air supply to flush out any remaining paint with the solvent.
8. Allow the solvent to pass through the entire system for several minutes until the solvent running from the gun is perfectly clean.

   Very important: do not spray into a closed container (see safety precautions).

   The compressed air can now be disconnected again and the spraygun switched off.
9. Clean the exterior of the high-pressure hose and high-pressure spraygun very carefully.
10. If the equipment is provided with a high-pressure filter, this should be opened and the filter element carefully cleaned.

    Before working on the high-pressure filter, ensure that the compressed air supply is disconnected and the equipment is off load.

    Unscrew the filter casing by inserting a spanner in the slot. Lift out compression spring (if fitted) and the filter support and pull out the rolled filter element. Clean all parts with a suitable solvent. The filter element and its support should be blasted through with compressed air. The filter may be reassembled after cleaning.
11. Cleaning the filter insert in the spraygun G-10-1 N.

Care and maintenance

The equipment should be thoroughly cleaned on every occasion after use. Cleaning should include not only the pump, but also the spraygun, the high-pressure hose and the various filters.

Lubrication

Air motor: the mechanical components require no maintenance.

Separating oil chamber in material feed pump
(see also page 10)

If paint residue is found in the separating oil chamber, the oil should be changed immediately.

Recommended separation oil, NUTO H46 by ESSO/EXXON.

Malfunction checklist

If these Operating Instructions are complied with, all spray equipment components should under normal circumstances work efficiently and without trouble. If difficulties should nevertheless be encountered, the following checklist should make it possible to identify the source of the trouble and to take appropriate corrective measures.

Trouble	Cause	Remedy
Pump fails to start	Control piston in centre position	Enables starting aid, see page 11, under point 5
	Spray tip clogged	Clean tip in accordance with instructions.
	High-pressure filter or insert filter in gun or high-pressure hose clogged	Clean components and ensure that spray material is free from dirt, etc.
	Material feed pump clogged	Strip down and clean
	Compressed air exhausting continuously	Inform after-sales service
Spraying pressure drops while spraying	Foreign matter in suction valve	Remove suction valve casing; clean and check valve seating
	Filter clogged in gun	Clean filter
	Seals worn	Replace seals
	Viscosity too high	Thin out spray material
	Tip too large or worn	Increase air pressure; fit smaller tip or replace
Irregular flow from feed pump: spray jet falls away	Worn valves, seals and piston	Replace affected parts
	Gummed valves	Clean feed pump, if necessary allowing it to stand in solvent for a short time
	Spraying pressure too low	Increase air inlet pressure (use smaller tip)
	Viscosity too high	Thin out spray material
Pump running steadily, but spray material not aspirated	Ball in suction valve not moving freely	Clean with solvent (vent system if necessary)
	Suction system union loose; air aspirated	Tighten
	Suction filter clogged	Clean filter
Pump operating with spraygun switched off	Seals, valves or piston worn	Replace affected parts
Air motor iced up	Icing may be caused by an excessive stroke rate	Use smaller tip, reduce air pressure
	High level of water condensation in air feed	Service unit (water separator and lubricator) needed
	Spraying conditions difficult, high atmospheric humidity, fog, temperatures around freezing point	Fill service unit (water separator and lubricator) with anti-freeze lubricant; adjust correctly the flow of anti-freeze lubricant

Recoil force diagramm for airless spray tips

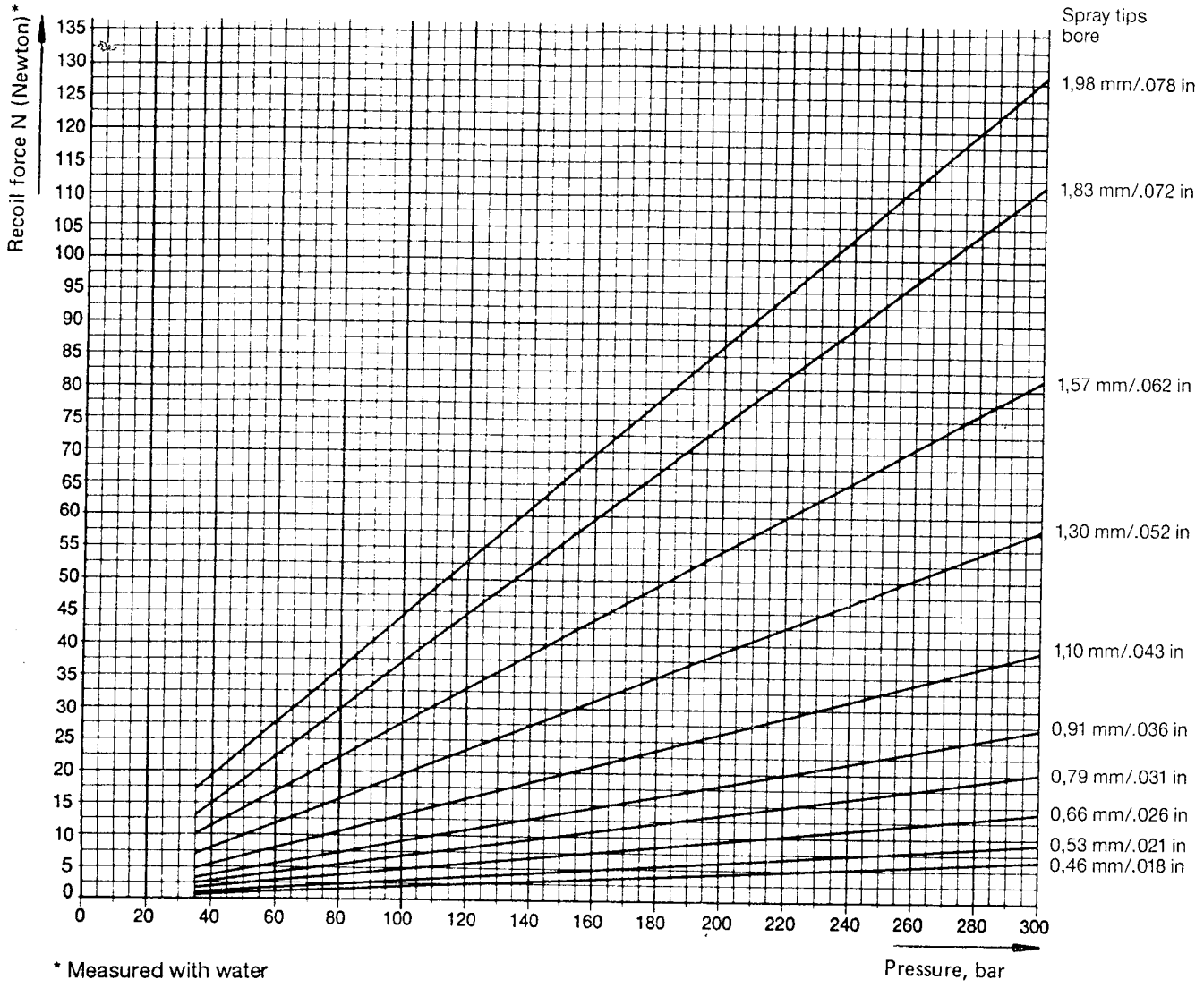

* Measured with water

This is the force acting on the gun and transmitted to the hand guiding the gun. For higher spraying pressures, proportional values are readily calculated.

Attention: With pole guns an additional torque may develop – hold gun with both hands.

Spray tip selection

Correct selection of a tip is essential for satisfactory and efficient spraying.

In many cases the correct spray tip can be found only by a spray test.

Here are some rules:
The spray fan must be uniform. If a streaky pattern shows on the surface, spraying pressure is too low or material viscosity too high.

Remedy: Increase pressure or thin material. Each pump delivers a given volume in direct ratio to tip size.

Basic rule: Large spray tip = low pressure
Small spray tip = high pressure

A very wide range of tips with widely varying spraying angles is available.

Airless-Tip table

WAGNER Profi Tip
up to 270 bar

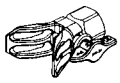

without nozzle
F-thread (11/16 -16 UN)
for Wagner Spray gun
Part No.**1006 001**

without nozzle
G-thread (7/8 -14 UNF)
for Graco/Titan Spray gun
Part No.**1006 002**

WAGNER Tip
up to 530 bar

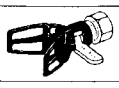

without nozzle
Part No. **1088 001**

Standard nozzles
up to 530 bar

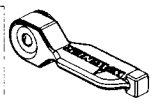

Application	Nozzle-marking	Spray angle	Bore inch/ mm	Spraywidth mm *	Part No.	Part No.	Part No.
	407	40 °	0.007/ 0.18	163	0090 407	1088 407	1006 407
Natural paint	507	50 °	0.007/ 0.18	190	0090 507		
Transparent lacquer	209	20 °	0.009/ 0.23	148	0090 209	1088 209	1006 209
Oil	309	30 °	0.009/ 0.23	158	0090 309	1088 309	1006 309
	409	40 °	0.009/ 0.23	198	0090 409	1088 409	1006 409
	509	50 °	0.009/ 0.23	215	0090 509	1088 509	1006 509
	609	60 °	0.009/ 0.23	225	0090 609	1088 609	1006 609
	111	10 °	0.011/ 0.28	87	0090 111	1088 111	1006 111
Synthetic resin paint	211	20 °	0.011/ 0.28	93	0090 211	1088 211	1006 211
PVC paint	311	30 °	0.011/ 0.28	127	0090 311	1088 311	1006 311
	411	40 °	0.011/ 0.28	210	0090 411	1088 411	1006 411
	511	50 °	0.011/ 0.28	225	0090 511	1088 511	1006 511
	611	60 °	0.011/ 0.28	270	0090 611	1088 611	1006 611
	113	10 °	0.013/ 0.33	103	0090 113	1088 113	1006 113
Paint, undercoat	213	20 °	0.013/ 0.33	107	0090 213	1088 213	1006 213
Zinc chromate primer	313	30 °	0.013/ 0.33	142	0090 313	1088 313	1006 313
Priming paint	413	40 °	0.013/ 0.33	207	0090 413	1088 413	1006 413
Filler	513	50 °	0.013/ 0.33	255	0090 513	1088 513	1006 513
	613	60 °	0.013/ 0.33	282	0090 613	1088 613	1006 613
	813	80 °	0.013/ 0.33	375	0090 813	1088 813	1006 813
	115	10 °	0.015/ 0.38	98	0090 115	1088 115	1006 115
Filler	215	20 °	0.015/ 0.38	100	0090 215	1088 215	1006 215
Spray primer	315	30 °	0.015/ 0.38	162	0090 315	1088 315	1006 315
Rustproofing paint	415	40 °	0.015/ 0.38	202	0090 415	1088 415	1006 415
	515	50 °	0.015/ 0.38	252	0090 515	1088 515	1006 515
	615	60 °	0.015/ 0.38	268	0090 615	1088 615	1006 615
	715	70 °	0.015/ 0.38	295	0090 715	1088 715	1006 715
	815	80 °	0.015/ 0.38	395	0090 815	1088 815	1006 815
	217	20 °	0.017/ 0.43	117	0090 217	1088 217	1006 217
	317	30 °	0.017/ 0.43	153	0090 317	1088 317	1006 317
Spray primer	417	40 °	0.017/ 0.43	190	0090 417	1088 417	1006 417
Rustproofing paint	517	50 °	0.017/ 0.43	235	0090 517	1088 517	1006 517
Minium	617	60 °	0.017/ 0.43	283	0090 617	1088 617	1006 617
Latex paint	717	70 °	0.017/ 0.43	342	0090 717	1088 717	1006 717
	219	20 °	0.019/ 0.48	147	0090 219	1088 219	1006 219
	319	30 °	0.019/ 0.48	168	0090 319	1088 319	1006 319
	419	40 °	0.019/ 0.48	192	0090 419	1088 419	1006 419
	519	50 °	0.019/ 0.48	272	0090 519	1088 519	1006 519
	619	60 °	0.019/ 0.48	315	0090 619	1088 619	1006 619
	719	70 °	0.019/ 0.48	330	0090 719	1088 719	1006 719
	819	80 °	0.019/ 0.48	402	0090 819	1088 819	1006 819
	221	20 °	0.021/ 0.53	148	0090 221	1088 221	1006 221
Mica paint	421	40 °	0.021/ 0.53	183	0090 421	1088 421	1006 421
Zinc dust coating	521	50 °	0.021/ 0.53	252	0090 521	1088 521	1006 521
Dispersion paint	621	60 °	0.021/ 0.53	313	0090 621	1088 621	1006 621
	821	80 °	0.021/ 0.53	380	0090 821	1088 821	1006 821
	223	20 °	0.023/ 0.58	130	0090 223	1088 223	1006 223
Rustproofing paint	423	40 °	0.023/ 0.58	185	0090 423	1088 423	1006 423
	523	50 °	0.023/ 0.58	253	0090 523	1088 523	1006 523
	623	60 °	0.023/ 0.58	298	0090 623	1088 623	1006 623
	723	70 °	0.023/ 0.58	340	0090 723	1088 723	1006 723
	823	80 °	0.023/ 0.58	355	0090 823	1088 823	1006 823
	225	20 °	0.025/ 0.64	133	0090 225	1088 225	1006 225
	425	40 °	0.025/ 0.64	198	0090 425	1088 425	1006 425
	525	50 °	0.025/ 0.64	250	0090 525	1088 525	1006 525
Dispersion paint	625	60 °	0.025/ 0.64	265	0090 625	1088 625	1006 625
Dispersion paint,	825	80 °	0.025/ 0.64	360	0090 825	1088 825	1006 825
distemper and	227	20 °	0.027/ 0.69	143	0090 227	1088 227	1006 227
filler paint	427	40 °	0.027/ 0.69	222	0090 427	1088 427	1006 427
	527	50 °	0.027/ 0.69	233	0090 527	1088 527	1006 527
	627	60 °	0.027/ 0.69	270	0090 627	1088 627	1006 627
	827	80 °	0.027/ 0.69	353	0090 827	1088 827	1006 827
	629	60 °	0.029/ 0.75	288	0090 629	1088 629	1006 629
	231	20 °	0.031/ 0.79	130	0090 231	1088 231	1006 231
	431	40 °	0.031/ 0.79	220	0090 431	1088 431	1006 431
	531	50 °	0.031/ 0.79	223	0090 531	1088 531	1006 531
	631	60 °	0.031/ 0.79	273	0090 631	1088 631	1006 631
	433	40 °	0.033/ 0.84	220	0090 433	1088 433	1006 433
	235	20 °	0.035/ 0.90	120	0090 235	1088 235	1006 235
	435	40 °	0.035/ 0.90	220	0090 435	1088 435	1006 435
	535	50 °	0.035/ 0.90	270	0090 535	1088 535	1006 535
	635	60 °	0.035/ 0.90	310	0090 635	1088 635	1006 635
	839	80 °	0.039/ 0.99	480	0090 839	--	--
	243	20 °	0.043/ 1.10	165	0090 243	1088 243	1006 243
Large-area paintwork	543	50 °	0.043/ 1.10	260	0090 543	1088 543	1006 543
	552	50 °	0.052/ 1.30	280	0090 552	1088 552	1006 552

* At a distance of approx. 30 cm from the sprayed object and a pressure of 100 bar with synthetic enamel 20 DIN-s

Flow volume table

Delivery rate and atomisation depend on tip size, and on pressure, as the following table show.

ø mm	ø inch (")	Available with spray angle	Flow volume in l/min* at 70 bars	at 100 bars	at 150 bars
0.18	0.007	10-20-40-50°	0.16	0.19	0.26
0.23	0.009	10-20-40-50-60°	0.23	0.26	0.30
0.28	0.011	10-20-40-50-60-80°	0.30	0.38	0.47
0.33	0.013	10-20-40-50-60-80°	0.45	0.57	0.69
0.38	0.015	10-20-40-50-60-80°	0.61	0.72	0.91
0.46	0.018	20-40-50-60-80°	0.95	1.14	1.40
0.53	0.021	20-40-50-60-80°	1.25	1.56	1.90
0.66	0.026	20-40-50-60-80°	1.90	2.32	2.80
0.79	0.031	40-50-60-80°	2.84	3.50	4.20
0.91	0.036	40-50-60-80°	3.79	4.56	5.50
1.10	0.043	50-60-80°	5.69	6.84	8.30
1.30	0.052	50°	7.60	9.12	11.10

* Flow volume refers to water.

Servicing and cleaning instructions for airless flat-jet tips

The tip has an orifice which has been drilled with the highest precision. To ensure long service life it must be treated carefully. Remember that the tungsten carbide insert is brittle! Never damage it with sharp-edged metal objects.

Observe the following guidelines for keeping the tip clean and ready for operation:

1. Remove the tip from the spray gun.
2. Immerse the tip in a suitable cleaning agent until all paint residues are dissolved.
3. Blow compressed air through the tip, if it is available.
4. Remove any residues with a pointed wooden stick (toothpick).
5. Check the tip with a magnifier and repeat points 2 to 4 if necessary.

Spare parts list 28-14

Pos.	Part-No.	Description
2	9900 335	Cylindrical screw M 5 x 50 DIN 912 (3)
3	9922 106	Lock washer internal teeth J 5,1 DIN 6797(3)
4	0100 336	Sliding piece (2)
5	9994 220	Spring (2)
6	0100 335	Guide bushing (2)
7	0105 242	Cover
8	0100 333	Stop
9	9900 710	Cylindrical screw M 4 x 10 DIN 84
10	0100 326*	Damping washer
16	0100 211	Lever compl.
20	0105 204	Cylinder
21	0105 323	Model plate
25	0105 312	Threaded stud (2)
26	9950 103	Contact bridge
27	9950 513	Binding clip D8 DIN 46 282 (2)
28	9921 504	Spring washer B 4 DIN 127 (3)
29	9900 730	Cylindrical screw M 4 x 8 DIN 84 (3)
35	0100 328	Reverse piston
36	9903 203	Countersunk head screw M 3 x 8 DIN 966 (4)
37	0105 322	Reverse bushing (2)
38	9971 039*	O-Ring 14 x 1,5 (4)
39	9971 036*	O-Ring 7,3 x 2,4
40	9970 138	Sealing washer 13,2 x 18 x 2
41	9990 610	Hose socket
43	9972 305*	Gasket 7 x 14 x 3,5
45	0105 321	Piston
46	9971 074*	O-Ring 65,6 x 5,3
48	0100 323	Washer
49	0100 344	Upper sleeve
50	0100 345	Spring
51	0100 343	Lower sleeve
52	0100 356	Nut
53	0100 321	Piston rod
54	0105 434	Spring cotter of a bolt
55	9972 304*	Gasket 14 x 20 x 5
56	9971 075*	O-Ring 76 x 2,5
57	0105 314	Connecting piece
70	0105 420	Distance piece
71	9970 103	Sealing washer A 16 x 20 x 1,5 DIN 7603
72	0010 755	Hose outlet fitting M 16 x 1,5
	0105 313	Hose outlet fitting NPSM 1/4 in
73	0109 453	Half-flange
74	9922 107	Lock washer internal teeth J4,3 DIN 6797 (6)
75	9900 722	Cylindrical screw M 4 x 16 DIN 84 (6)
76	9985 571	Hexagon nut
	0115 346	Upper packing combined compl., leather and Teflon
80	0105 431	Supporting ring
81	9973 003**	Vee-Packing (2 pieces leather)
82	9973 001**	Vee-Packing (2 pieces Teflon)
	0115 344	Upper packing compl., Teflon
80	0105 431	Supporting ring
82	9973 001	Vee-packing (4 pieces Teflon)
	0115 345	Upper packing compl., leather
80	0105 431	Supporting ring
81	9973 003	Vee-packing (5 pieces leather)
83	0105 424	Distance piece
85	0105 421	Piston
86	0105 426**	Outlet valve guide
87	9941 526**	Ball 8
88	0105 427	Valve seat
89	0105 425	Thread ring
90	9994 227	Spring
	0115 349	Lower packing combined compl., leather and Teflon
95	0105 432	Pressure ring
96	9973 002**	Vee-packing (3 pieces Teflon)
97	9973 004**	Vee-packing (2 pieces leather)
98	0105 433	Supporting ring
	0115 347	Lower packing compl., Teflon
95	0105 432	Pressure ring
96	9973 002	Vee-packing (4 pieces Teflon)
98	0105 433	Supporting ring
	0115 348	Lower packing compl., leather
95	0105 432	Pressure ring
97	9973 004	Vee-packing (5 pieces leather)
98	0105 433	Supporting ring
100	0105 435**	Sealing washer
101	0105 422	Intermediate piece
102	0105 428**	Suction valve guide
103	9941 512**	Ball 15
104	0105 429	Suction valve seat
105	0105 423	Suction valve housing
	0105 711*	Service-Set air motor
	0105 710**	Service-Set pump

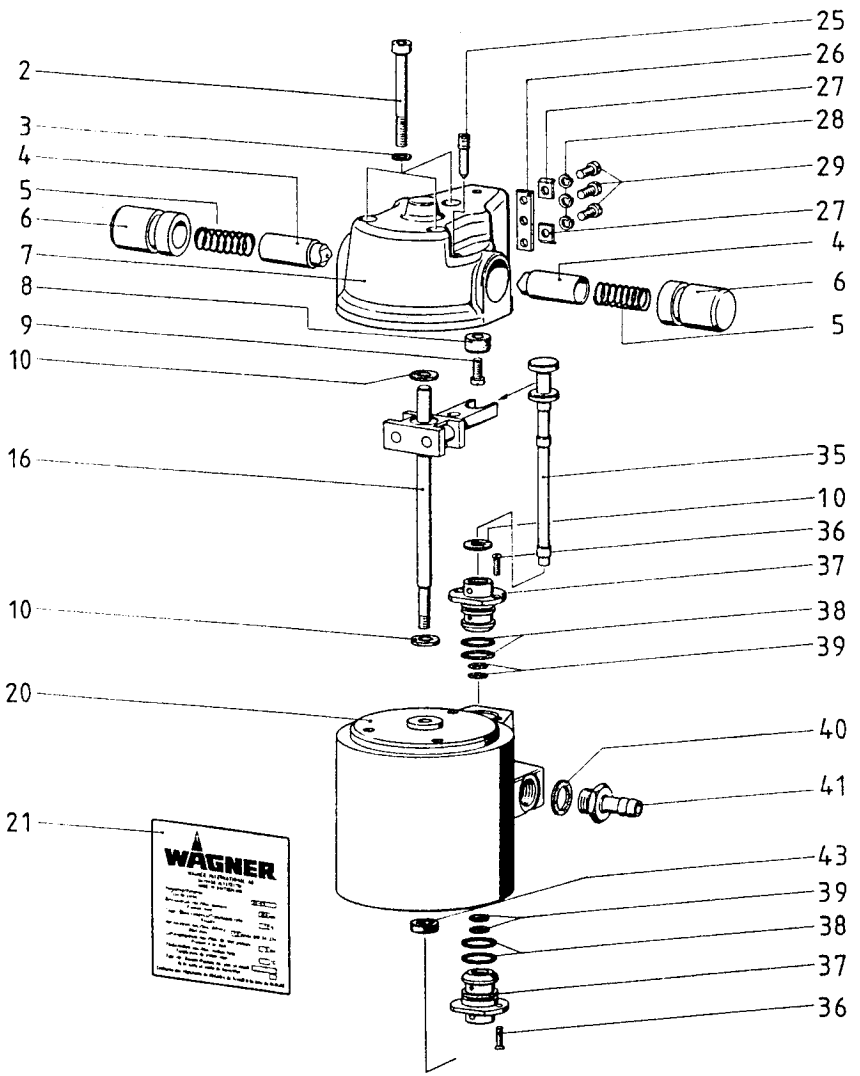

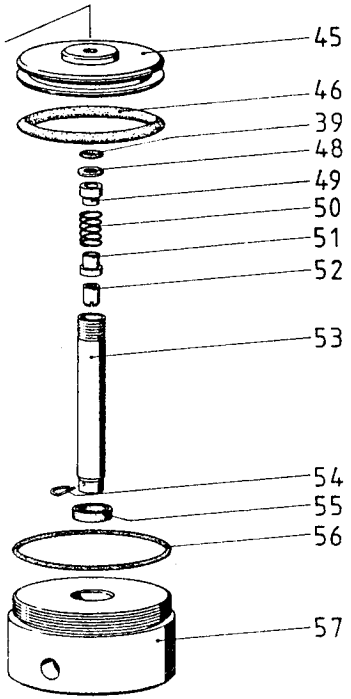

Antrieb kpl. ø75mm/03/90

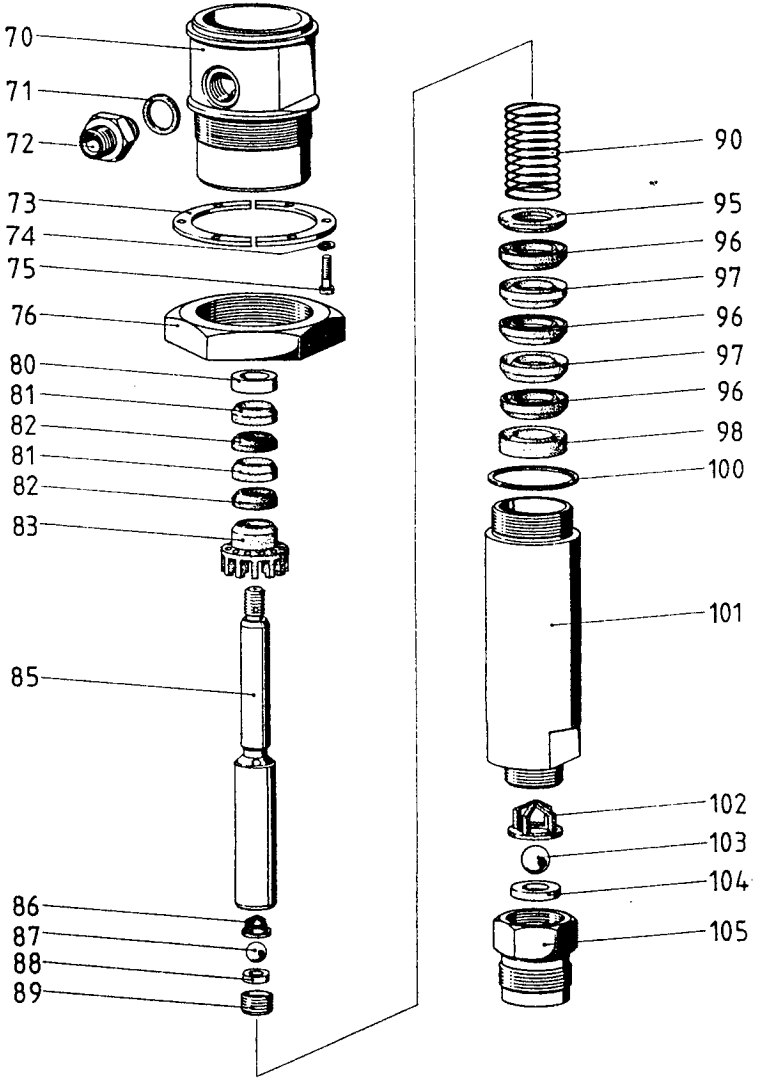

Pumpe kpl. 14 cm³ / 3 / 92

Spare parts list air motor 24-90, 33-70 and 48-90, 66-70

Pos.	Part-No. 24-90 33-70	Part-No. 48-90 66-70	Description
1	9900 226		Hexagon bolt M 8 x 170 DIN 931 (4)
		9900 228	Hexagon bolt M 12 x 170 DIN 931 (4)
2	9920 906		Curved spring washer A 8 DIN 137 (4)
		9920 907	Curved spring washer A 12 DIN 137 (4)
3	0111 322	0112 329	End casing
5	9971 098*	9971 098*	O-Ring 16 x 1,25
6	0123 357*	0123 357*	Pressure spring
7	0123 356*	0123 356*	Spring disc
9	9971 197*	9971 197*	O-Ring 13 x 1,5
10	0123 354*	0123 354*	Valve top casing
12	0123 358*	0123 358*	Spring
13	0123 355	0123 355	Valve stem
14	9971 003*	9971 003*	O-Ring 6 x 1
15	0123 353*	0123 353*	Valve bottom casing
16	9971 182*	9971 182*	O-Ring 4 x 1
22	9950 513	9950 513	Binding clip D 8 DIN 46 282 (2)
24	9921 504	9921 504	Single coil spring lock washer B 4 DIN 127 (3)
25	9900 353	9900 353	Hexagon socket head cap screw M 4 x 12 DIN 912
26	9900 730	9900 730	Slotted cheese head screw M 4 x 8 DIN 84 (2)
27	9950 103	9950 103	Contact bridge
29	0111 324	0112 330	Housing
30	9971 304*		O-Ring 138 x 2
		9971 305*	O-Ring 194 x 2
31	9960 809	9960 809	Bushing
33	9972 318*	9972 318*	Grooved packing ring 18 x 24 x 4
34	0123 386	0123 386	Extension
36	9971 303*		O-Ring 130 x 5
		9971 302*	O-Ring 190 x 5
37	0123 307	0123 307	Damper plate
40	0111 321	0112 328	Piston
41	0123 385	0123 385	Piston rod
42	0111 320	0112 327	Cylinder
43	0113 332		Model plate 24-90
	0111 373		Model plate 33-70
		0114 302	Model plate 48-90
		0112 307	Model plate 66-70
45	0111 323	0112 331	Flanged housing
46	0123 310	0123 310	Socket
47	0111 394	0111 394	Spring cotter of a bolt
50	0123 343	0123 343	Closing screw
52	9971 029*	9971 029*	O-Ring 4 x 1
53	9971 306*	9971 306*	O-Ring 17 x 2
55	9900 511	9900 511	Hexagon socket counter sunk head cap screw M 6 x 16 DIN 7991 (4)
56	0112 333	0112 333	Plate
57	0112 334	0112 334	Seal plate
58	0112 338	0112 338	Housing
59	9920 904	9920 904	Curved spring washer B 6 DIN 137
61	9900 338	9900 338	Hexagon socket head cap screw M 6 x 30 DIN 912 (4)
63	9900 307	9900 307	Hexagon socket head cap screw M 5 x 16 DIN 912 (4)
64	9920 905	9920 905	Curved spring washer A 5 DIN 137 (4)
65	0112 342	0112 342	Cover
66	9871 010	9871 010	O-Ring 6,07 x 1,78
67	0112 343	0112 343	Pin
68	0112 336*	0112 336*	Seal plate
69	9900 325	9900 325	Hexagon socket head cap screw M6 x 16 DIN 912 (2)
70	0111 232	0111 232	Control piston
71	0112 335	0112 335	Cover
	0112 220	0112 220	Sound absorber (2)
72	0112 208	0112 208	Joining piece
73	0112 304	0112 304	Filter
74	0112 305	0112 305	Filter support
75	0112 301	0112 301	Cover
76	9900 333	9900 333	Hexagon socket head cap screw M 6 x 35 DIN 912
	0111 710*	0112 710*	Service-Set

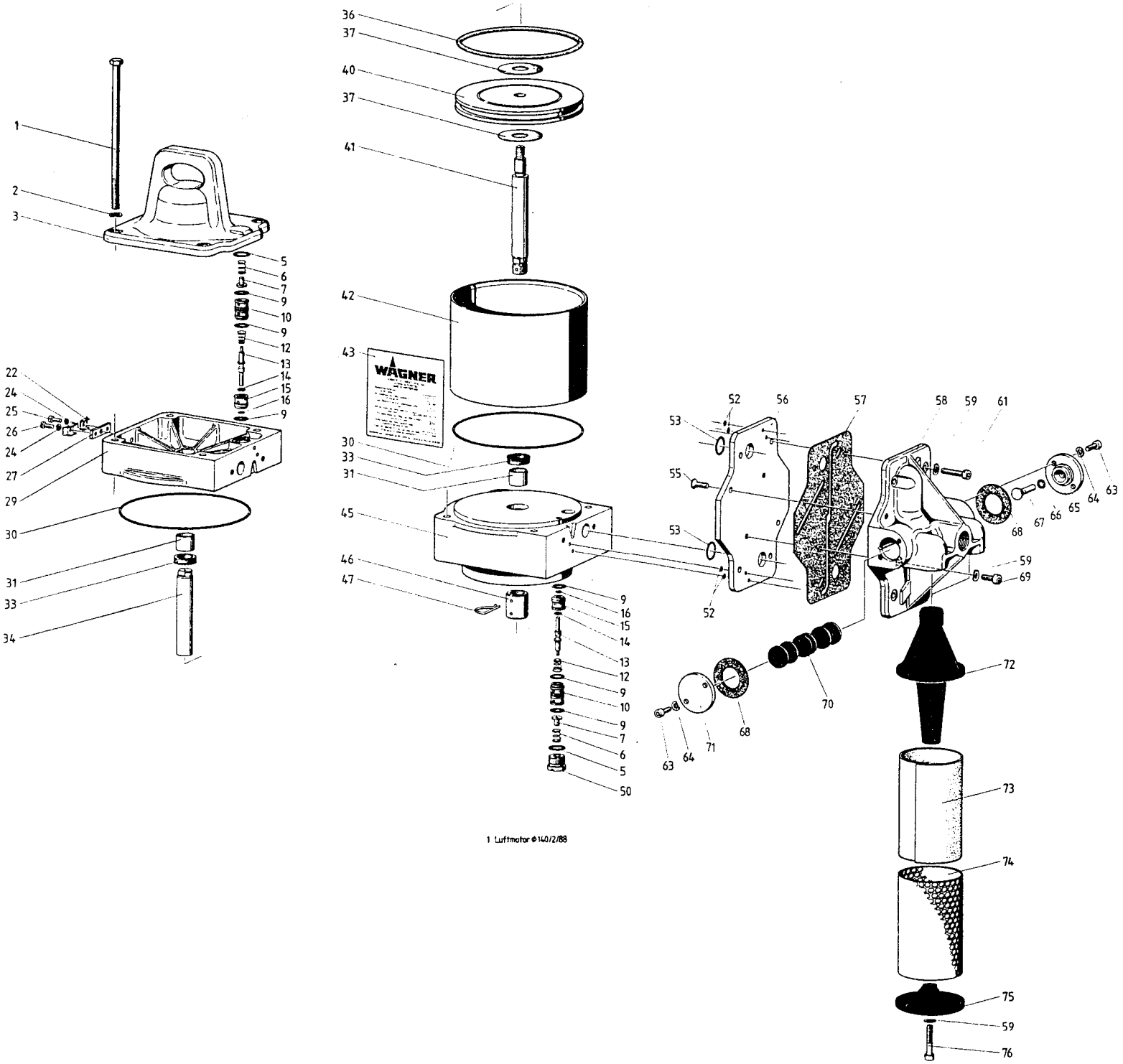

1 Luftmotor Ø 140/2/88

2 Luftmotor Ø 140 u. 200/1/92

Spare parts list material feed pump 33-70 and 66-70

Pos.	Part-No.	Description
1	0111 300	Upper housing
2	9921 503	Spring washer B 6 DIN 127
3	9900 312	Cylindrical screw M 6 x 20 DIN 912
4	9970 103	Sealing washer A 16 x 20 x 1,5 DIN 7603
5	0010 755	Hose outlet fitting M 16 x 1,5
6	0113 323	Flange
7	9971 066*	O-Ring 72 x 3
	0115 016	Upper packing combined complete, leather and Teflon
10	0111 306	Pressure ring
11	0018 304*	Vee-packing (4 pieces Teflon)
12	0018 315*	Vee-packing (3 pieces leather)
14	0111 431	Supporting ring
	0111 203	Upper packing complete, Teflon
10	0111 306	Pressure ring
11	0018 304	Vee-packing (7 pieces Teflon)
14	0111 431	Supporting ring
	0115 015	Upper packing complete, leather
10	0111 306	Pressure ring
12	0018 315	Vee-packing (9 pieces leather)
14	0111 431	Supporting ring
15	0111 303	Spring
16	0111 301	Lower housing
17	9971 091*	O-Ring 57 x 3
	0115 018	Lower packing combined complete, leather and Teflon
20	0111 309	Supporting ring
21	0111 310*	Vee-packing (4 pieces Teflon)
22	0018 331*	Vee-packing (3 pieces leather)
23	0111 311	Pressure ring
	0111 204	Lower packing complete, Teflon
20	0111 309	Supporting ring
21	0111 310	Vee-packing (7 pieces Teflon)
23	0111 311	Pressure ring
	0115 017	Lower packing complete, leather
20	0111 309	Supporting ring
22	0018 331	Vee-packing (6 pieces leather)
23	0111 311	Pressure ring
24	0111 302	Cylinder
25	0111 394	Spring cotter of a bolt
26	0111 304	Piston
27	0123 331*	Outlet ball guide
32	9941 518*	Ball 11
33	0123 332	Valve seat ring
34	0123 328	Valve screw
36	0111 475	Bushing
37	0111 474	Ball guide
38	9941 513*	Ball 22
39	9971 433*	O-Ring 28 x 1,5
40	0123 392	Valve seat
41	9971 015*	O-Ring 46 x 3
42	0111 432	Suction valve housing
	0111 715*	Service-Set

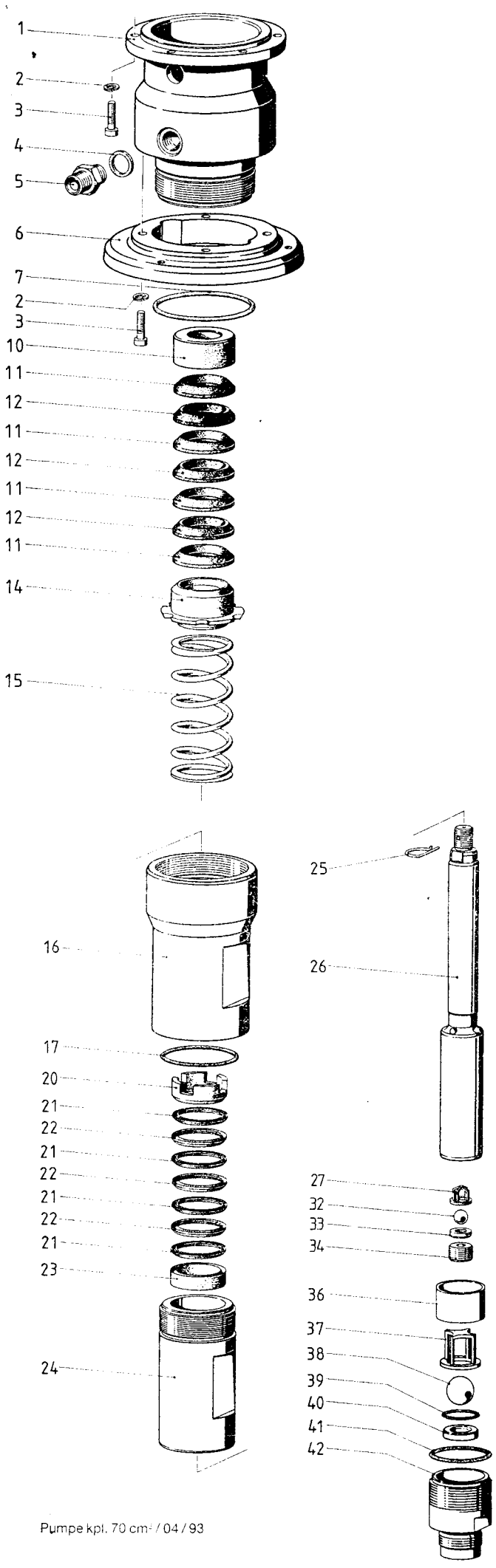

Pumpe kpl. 70 cm³ / 04 / 93

Spare parts list material feed pump 24-90 and 48-90

Pos.	Part-No.	Description
1	0111 300	Upper housing
2	9921 503	Spring washer B 6 DIN 127
3	9900 312	Cylindrical screw M 6 x 20 DIN 912
5	9970 103	Sealing washer A 16 x 20 x 1,5 DIN 7603
6	0010 755	Hose outlet fitting M 16 x 1,5
7	0113 323	Flange
8	9971 066*	O-Ring 72 x 3
	0115 207	Upper packing combined complete, leather and Teflon
9	0113 310	Supporting ring
11	0113 313*	Vee-packing (4 pieces Teflon)
12	0113 311*	Vee-packing (4 pieces leather)
13	0113 315	Pressure ring
	0113 203	Upper packing complete, Teflon
9	0113 310	Supporting ring
11	0113 313	Vee-packing (7 pieces Teflon)
13	0113 315	Pressure ring
	0115 210	Upper packing complete, leather
9	0113 310	Supporting ring
12	0113 311	Vee-packing (9 pieces leather)
13	0113 315	Pressure ring
14	0113 309	Spring
20	0113 301	Lower housing
	0115 209	Lower packing combined complete, leather and Teflon
22	0113 316	Supporting ring
23	0113 317*	Vee-packing (4 pieces Teflon)
24	0113 325*	Vee-packing (3 pieces leather)
25	0113 318	Pressure ring
	0113 204	Lower packing complete, Teflon
22	0113 316	Supporting ring
23	0113 317	Vee-packing (6 pieces Teflon)
25	0113 318	Pressure ring
	0115 208	Lower packing complete, leather
22	0113 316	Supporting ring
24	0113 325	Vee-packing (9 pieces leather)
25	0113 318	Pressure ring
30	0113 302	Cylinder
31	0111 394	Spring cotter of a bolt
32	0113 304	Piston
33	0113 343*	Ball seat
34	9941 512*	Ball 15
35	0113 335	Valve seat ring
36	0113 340	Valve screw
37	0113 341	Valve screw
40	0113 342*	Ball guide
41	9941 513*	Ball 22
42	0113 336	Valve seat
44	9971 091*	O-Ring 57 x 3
45	0113 303	Suction valve housing
	0113 701*	Service-Set

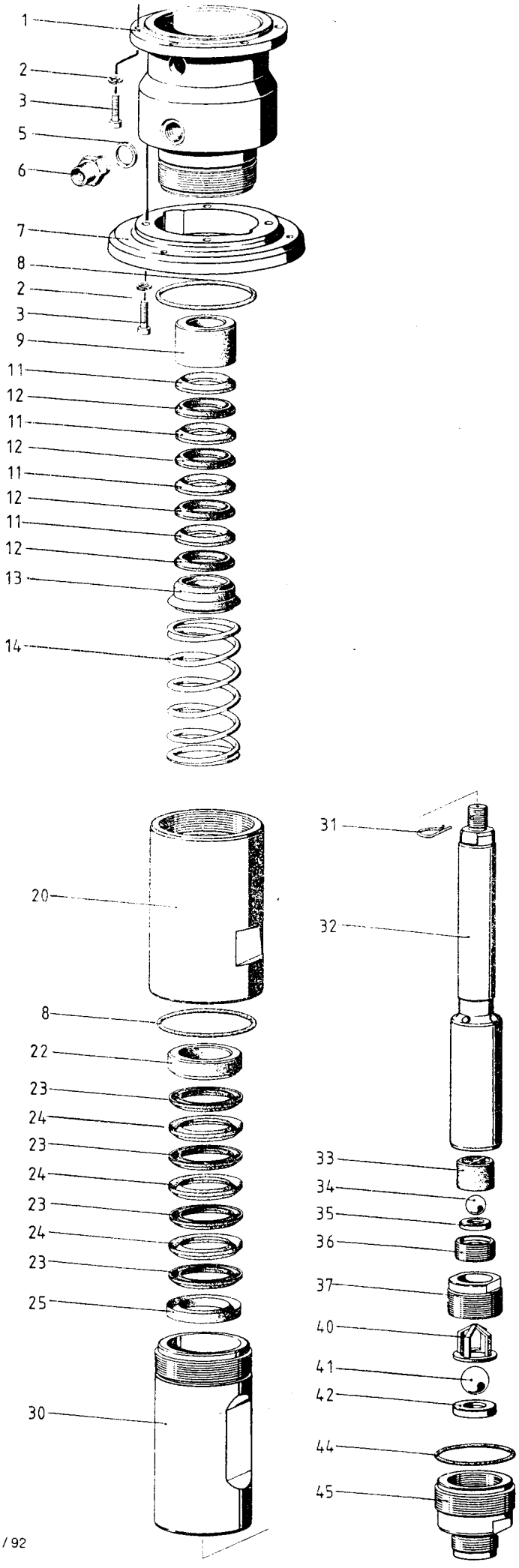
1
2
3
5
6
7
8
2
3
9
11
12
11
12
11
12
11
12
13
14
20
8
22
23
24
23
24
23
24
23
25
30
31
32
33
34
35
36
37
40
41
42
44
45

Accessories for spraying equipment pneumatically powered 28-14

Pos.	Part-No.	Description
1		Base equipment 28-14
2	0115 275	Container, compl. (40 l)
3	0115 063	Suction system for bulk containers with 200 l
4	0115 286	Suction system for bulk containers up to max. 200 l
5	0115 284	Prolongation hose, compl. (for enamels)
6	0115 285	Prolongation hose, compl. (for emulsions)
7	0115 075	Wall-bracket, compl.
8	0115 048	High pressure filter, 200/0.085 mm
	0070 378	Filter insert, 200 mesh, 0.085 mm mesh gauge
	0070 377	Filter insert, 150 mesh, 0.10 mm mesh gauge
	0070 376	Filter insert, 100 mesh, 0.16 mm mesh gauge
	0070 375	Filter insert, 70 mesh, 0.22 mm mesh gauge
9	0047 799	Pressure gauge with fitting 400 bar
10	9984 402	High pressure hose, in diameter 4 mm, 5 m long union nut thread M 16 x 1,5
	9984 417	High pressure hose, in diameter 6 mm, 10 m long union nut thread M 16 x 1,5
11	0161 002	High-capacity spray gun G-10-1 N
12	0115 071	Back pressure valve, compl. for 250 bar
13	0034 075	T-fitting for connecting two guns
14	0017 237	Flexible suction hose (for enamels)
15	0017 236	Flexible suction hose (for emulsions)
16	9992 509	Anti-freeze lubricant 250 ml (for air service unit) ESSO/EXXON MILLCOT K 68
17	9992 504	Separating oil 250 ml (for material feed pump) ESSO/EXXON NUTO H 46
19	0115 065	Rigid suction tube (for tripod-version and container-version with 40 l)
20	0115 052	Tripod, compl.

Pos.	Part-No.	Description
21	0115 066	Service unit with transparent bowls, compl.
	0115 067	Service unit with metal bowls, compl.
22	0038 930	Earthing cable 6 m
23	0320 005	Pneumatic agitator, compl. up to 200 l bulk containers
24	0320 011	Pneumatic agitator, compl. up to 40 l bulk containers
25	0017 247	Pneumatic agitator, compl.
26	0115 082	Trolley, compl.
27	0115 346	Upper packing, compl. combined leather and Teflon
	0155 344	Upper packing, compl. Teflon
	0115 345	Upper packing, compl. leather
28	0115 349	Lower packing, compl. combined leather and Teflon
	0115 347	Lower packing, compl. Teflon
	0115 348	Lower packing, compl. leather
30	0115 363	Relief valve, compl.
35	0096 004	Pole gun, 30 cm long
	0096 019	Pole gun, 100 cm long
	0096 005	Pole gun, 150 cm long
36	0096 015	Tip extension with swivel joint, 100 cm
	0096 016	Tip extension with swivel joint, 200 cm
37	0999 320	Tip extension, 15 cm
	0999 321	Tip extension, 30 cm
	0999 322	Tip extension, 45 cm
	0999 323	Tip extension, 60 cm
38	0115 094	Safety device
39	0010 722	Potential equalization cable 2 m

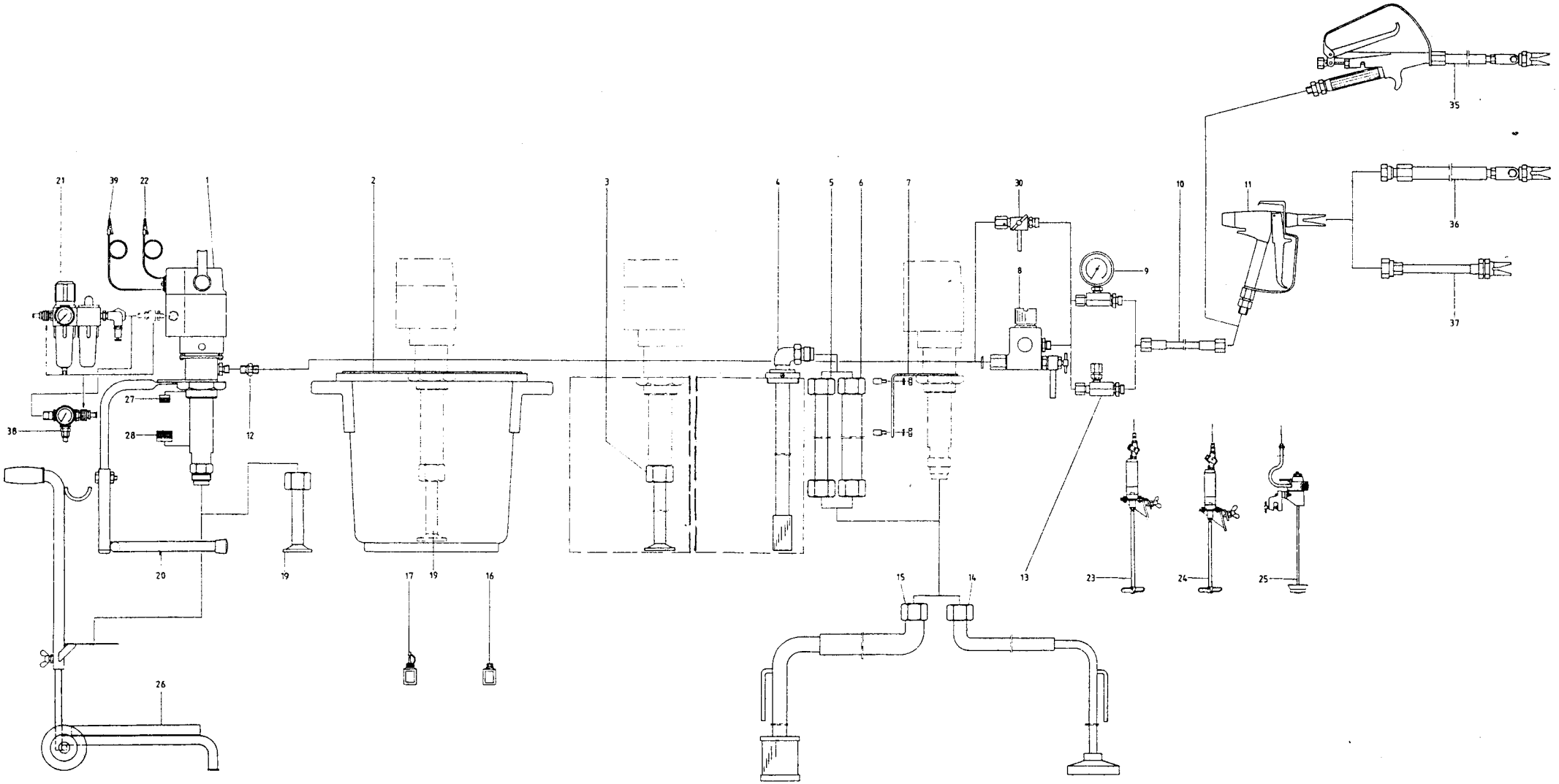

Zubehör 28-14/9/86

Accessories for spraying equipments pneumatically powered 24-90, 33-70, 48-90 and 66-70

Pos.	Part-No.	Description	24-90	33-70	48-90	66-70
1		Base equipment	●	●	●	●
2	0115 104	Service unit compl.	●	●	●	●
4	9990 408	Hose clip, DN 25 mm	●	●	●	●
5	9982 301	Air hose (length upon request), DN 13 mm/8lin	●	●	●	●
6	0115 361	Distributor	●	●	●	●
7	0115 355	High pressure filter, 200/0.085 mm	●	●	●	●
	0070 316	Filter insert, 250 mesh of 0.060 mm gauge	●	●	●	●
	0070 317	Filter insert, 200 mesh of 0.085 mm gauge	●	●	●	●
	0070 344	Filter insert, 100 mesh of 0.16 mm gauge	●	●	●	●
	0070 326	Filter insert, 70 mesh of 0.22 mm gauge	●	●	●	●
	0070 327	Filter insert, 45 mesh of 0.36 mm gauge	●	●	●	
8	0038 930	Earthing cable 6 m	●	●	●	●
9	0010 722	Potential equalization cable 2 m	●	●	●	●
10	9970 103	Sealing washer A 16 x 20 x 1,5 DIN 7603	●	●	●	●
13	0115 033	Back pressure valve	●	●	●	●
14	0017 386	Socket	●	●	●	●
15	0115 226	Material tube, compl.	●	●	●	●
16	0115 073	Base plate, compl.	●	●	●	●
17	0017 262	Swing piece, compl.	●	●	●	●
18	0010 755	Connecting piece	●	●	●	●
19	0115 016	Upper packing, compl. combined leather and Teflon		●		●
	0115 207	Upper packing, compl. combined leather and Teflon	●		●	
	0111 203	Upper packing, compl. Teflon		●		●
	0113 203	Upper packing, compl. Teflon	●		●	
	0115 015	Upper packing, compl. leather		●		●
	0115 210	Upper packing, compl. leather	●		●	
20	0115 018	Lower packing, compl. combined leather and Teflon		●		●
	0115 209	Lower packing, compl. combined leather and Teflon	●		●	
	0111 204	Lower packing, compl. Teflon		●		●
	0113 204	Lower packing, compl. Teflon	●		●	
	0115 017	Lower packing, compl. leather		●		●
	0115 208	Lower packing, compl. leather	●		●	
21	0017 245	Pressure gauge, compl. 1000 bar/14.500 psi	●	●	●	●
22	9991 509	High pressure three way ball valve	●	●	●	●
23	9991 529	Ball valve compl.	●	●	●	●
24	0017 267	Distributor with five outlets, compl.	●	●	●	●
25	0017 271	Cross fitting with three outlets, compl.	●	●	●	●
26	0017 270	T-fitting with two outlets, compl.	●	●	●	●
27	0017 237	Flexible suction hose (for enamels)	●	●	●	●
28	0115 011	Rigid suction tube	●	●	●	●
29	0017 236	Flexible suction hose (for emulsions)	●	●	●	●
30	0115 072	Trolley compl.	●	●	●	●
31	0017 231	Four legs, two parts	●	●	●	●

Pos.	Part-No.	Description	24-90	33-70	48-90	66-70
32	0035 070	Wall suspension, compl.	●	●	●	●
33	0017 275	Flexible return hose, 1 m long	●	●	●	●
34	0017 268	Flexible return hose, 0,5 m long	●	●	●	●
35	0017 247	Pneumatic agitator	●	●	●	●
36	9984 430	Super high pressure hose, DN 10 mm, 10m/ 33 ft long, 530 bar/7.685 psi, union nut thread M18x1,5	●	●	●	●
37	0115 206	Adaptor socket M 18 x 1,5	●	●	●	●
38	9984 417	High pressure hose, DN 6 mm, 10 m/33 ft long, 270 bar/3.915 psi, union nut thread M 16 x 1,5	●	●		
	9984 420	Super high pressure hose, DN 6 mm, 10 m/33 ft long, 530 bar/7.685 psi, union nut thread M 16 x 1,5			●	●
	9984 431	Super high pressure hose, DN 10 mm, 10 m/ 33 ft long, 530 bar/7.685 psi, union nut thread M 16 x 1,5		●	●	●
39	0161 002	High-capacity spray gun G-10-1 N	●	●		
	0217 001	High-capacity spray gun G 530	●	●	●	●
41	0115 074	Wall bracket, compl.	●	●	●	●
42	9992 504	Separating oil 250 ml (for material feed pump) ESSO/EXXON NUTO H 46	●	●	●	●
43	9992 509	Anti-freeze lubricant 250 ml (for air line control) ESSO/EXXON MILLCOT K 68	●	●	●	●
44.1	0115 285	Prolongation hose compl. (for emulsions)	●	●	●	●
44.2	0115 284	Prolongation hose compl. (for enamels)	●	●	●	●
45	0115 286	Rigid suction tube for bulk containers, compl.	●	●	●	●
46	0115 323	Metal bowl, compl. with automatic water separations	●	●	●	●
	0115 324	Transparent bowl, compl. with automatic water separation	●	●	●	●
47	0055 740	Curved suction tube	●	●	●	●
48	0096 004	Pole gun, 30 cm long	●			
	0096 019	Pole gun, 100 cm long	●			
	0096 005	Pole gun, 150 cm long	●			
	0096 006	Pole gun, 270 cm long	●			
49	0096 015	Tip extension with swivel joint, 100 cm	●			
	0096 016	Tip extension with swivel joint, 200 cm	●			
	0096 017	Tip extension with swivel joint, 300 cm	●			
50	0999 320	Tip extension, 15 cm	●	●	●	
	0999 321	Tip extension, 30 cm	●	●	●	
	0999 322	Tip extension, 45 cm	●	●	●	
	0999 323	Tip extension, 60 cm	●	●	●	
52	0034 633	Return hose	●	●	●	●
53	0115 093	Safety device	●	●	●	●

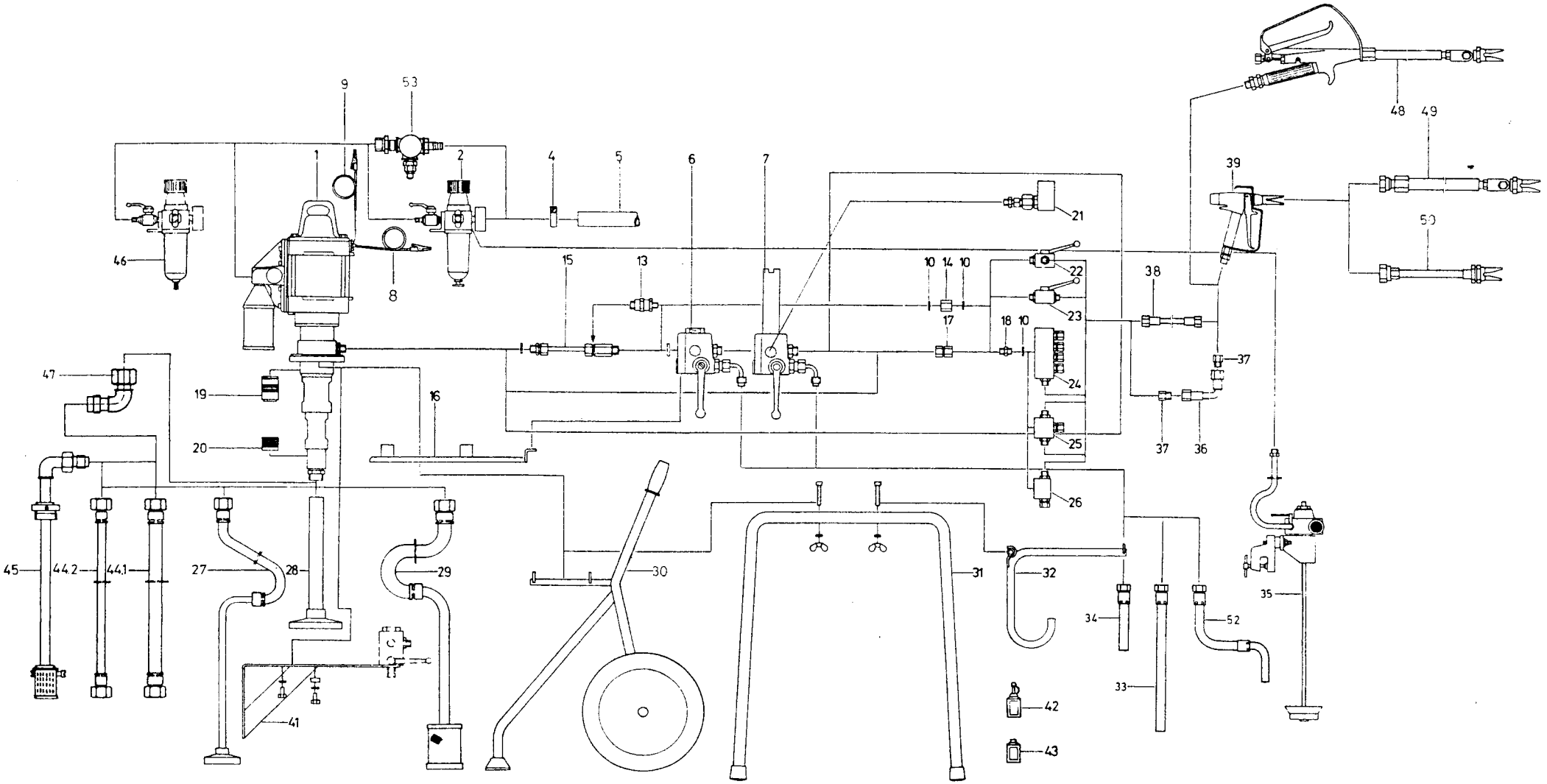

Zubehör 33-70/66-70/02/86

Wichtiger Hinweis zur Produkthaftung

Aufgrund einer ab 01. 01. 1990 gültigen EG-Verordnung haftet der Hersteller nur dann für sein Produkt, wenn alle Teile vom Hersteller stammen oder von diesem freigegeben wurden, bzw. die Geräte sachgemäss montiert, betrieben und gewartet werden.
Bei Verwendung von fremdem Zubehör und Ersatzteilen kann die Haftung ganz oder teilweise entfallen.

Mit Original WAGNER-Zubehör und Ersatzteilen haben Sie die Gewähr, dass alle Sicherheitsvorschriften erfüllt sind.

Important notes on product liability

As a result of an EC regulation, effective as from January 1, 1990, the manufacturer shall only be liable for his product if all parts come from him or are approved by him, and if the devices are properly fitted , operated and maintained.
If other makes of accessory and spare parts are used, the manufacturer's liability could be fully or partially null and void.

The usage of original WAGNER accessories and spare parts guarantees that all safety regulations are observed.

Garantieerklärung

Für dieses Gerät leisten wir Werksgarantie in folgendem Umfang:
Alle diejenigen Teile werden unentgeltlich nach unserer Wahl ausgebessert oder neu geliefert, die sich innerhalb von 24 Monaten bei Einschicht-, 12 Monaten bei Zweischicht- oder 6 Monaten bei Dreischichtbetrieb seit Übergabe an den Käufer infolge eines vor dieser Übergabe liegenden Umstandes – insbesondere wegen fehlerhafter Bauart, schlechter Baustoffe oder mangelhafter Ausführung – als unbrauchbar oder in ihrer Brauchbarkeit erheblich beeinträchtigt erweisen.
Die Garantie wird in der Form geleistet, dass nach unserer Entscheidung das Gerät oder Einzelteile hiervon ausgetauscht oder repariert werden. Die hierfür erforderlichen Aufwendungen, insbesondere Transport-, Wege-, Arbeits-, und Materialkosten werden von uns getragen, es sei denn, dass sich die Aufwendungen erhöhen, weil das Gerät nachträglich an einen anderen Ort als den Sitz des Bestellers verbracht worden ist.

Wir übernehmen keine Garantie für Schäden, die durch folgende Gründe verursacht oder mitverursacht worden sind:

Ungeeignete oder unsachgemäße Verwendung, fehlerhafte Montage, bzw. Inbetriebsetzung durch den Käufer oder durch Dritte, natürliche Abnutzung, fehlerhafte Behandlung oder Wartung, ungeeignete Beschichtungsstoffe, Austauschwerkstoffe und chemische, elektrochemische oder elektrische Einflüsse, sofern die Schäden nicht auf ein Verschulden von uns zurückzuführen sind. Schmirgelnde Beschichtungsstoffe wie z.B. Menninge, Dispersionen, Glasuren, flüssige Schmirgel, Zinkstaubfarben usw. verringern die Lebensdauer von Ventilen, Packungen, Spritzpistolen, Düsen, Zylinder, Kolben usw.. Hierauf zurückzuführende Verschleißerscheinungen sind durch diese Garantie nicht gedeckt.
Komponenten die nicht von Wagner hergestellt wurden, unterliegen der ursprünglichen Herstellergarantie.
Der Austausch eines Teiles verlängert nicht die Garantiezeit des Gerätes.
Das Gerät ist unverzüglich nach Empfang zu untersuchen.
Offensichtliche Mängel sind bei Vermeidung des Verlustes der Garantie innerhalb von 14 Tagen nach Empfang des Gerätes der Lieferfirma oder uns schriftlich mitzuteilen.
Wir behalten uns vor, die Garantie durch ein Vertragsunternehmen erfüllen zu lassen.
Die Leistung dieser Garantie ist abhängig vom Nachweis durch Rechnung oder Lieferschein. Ergibt die Prüfung, daß kein Garantiefall vorliegt, so geht die Reparatur zu Lasten des Käufers.
Klargestellt wird, daß diese Garantieerklärung keine Einschränkung der gesetzlichen, bzw. der durch unsere allgemeinen Geschäftsbedingungen vertraglich vereinbarten Ansprüche darstellt.

J. Wagner AG

Warrenty

This unit is covered by our warranty on the following terms:

We will at our discretion repair or replace free of charge all parts which within 24 months in single-shift, 12 months in 2-shift or 6 months in 3-shift operation from date of receipt by the Purchaser are found to be wholly or substantially unusable due to causes prior to the sale, in particular faulty design, defective materials or poor workmanship.
The terms of the warranty are met at our discretion by the repair or replacement of the unit or parts thereof. The resulting costs, in particular shipping charges, road tolls, labour and material costs will be borne by us except where these costs are increased due to the subsequent shipment of the unit to a location other than the address of the purchaser.

This warranty does not cover damage caused by:

Unsuitable or improper use, faulty installation or commissioning by the purchaser or a third party, normal wear, negligent handling, defective maintenance, unsuitable coating products, substitute materials and the action of chemical, electrochemical or electrical agents, except when the damage is attributable to us.
Abrasive coating products such as redlead, emulsions, glazes, liquid abrasives, zinc dust paints and similar reduce the service life of valves, packings, spray guns, tips, cylinders, pistons etc. Any wear resulting from the aforementioned causes is not covered by this warranty.

Components not manufactured by Wagner are subject to the warranty terms of the original maker.

The replacement of a part does not extend the warranty period of the unit.

The unit should be inspected immediately upon receipt.

Any apparent defect should be notified to us or the dealer in writing within 14 days from date of sale of the unit.
The right to commission warranty services to a third party is reserved.
Warranty claims are subject to proof of purchase by submitting an invoice or delivery note. If an inspection finds damage not covered by the present warranty, the repair will be carried out at the expense of the purchaser.
Note that this warranty does not in any way restrict legally entitled claims or those contractually agreed to in our general terms and conditions.

J. Wagner AG

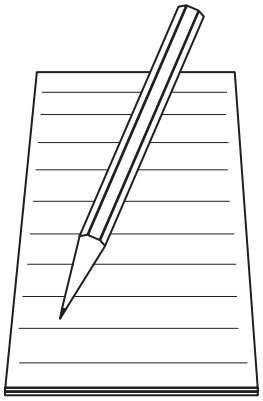

Germany J. WAGNER GmbH Otto-Lilienthal-Str. 18 Postfach 1120 D- 88677 Markdorf Telephone: ++49/ (0)7544 / 5050 Telefax: ++49/ (0)7544 / 505200 E-Mail:service.standard@wagner-group.com	**Switzerland** J. WAGNER AG Industriestrasse 22 Postfach 663 CH- 9450 Altstätten Telephone: ++41/ (0)71 / 757 2211 Telefax: ++41/ (0)71 / 757 2222 E-Mail: rep-ch@wagner-group.ch
Belgium WAGNER Spraytech Benelux BV Veilinglaan 56 B- 1861 Wolvertem Telephone: ++32/ (0)2 / 269 4675 Telefax: ++32/ (0)2 / 269 7845 E-Mail: info@wagner-group.be	**Denmark** WAGNER Spraytech Scandinavia A/S Kornmarksvej 26 DK- 2605 Brøndby Telephone: ++45/ 43 271 818 Telefax: ++45/ 43 43 05 28 E-Mail wagner@wagner-group.dk
United Kingdom WAGNER Spraytech (UK) Ltd. Haslemere Way Tramway Industrial Estate GB- Banbury, OXON OX16 8TY Telephone: ++44/ (0)1295 / 265 353 Telefax: ++44/ (0)1295 / 269861 E-Mail: enquiry@wagnerspraytech.co.uk	**France** J. WAGNER France S.A.R.L. 5, Ave. du 1er Mai – BP 47 F- 91122 Palaiseau-Cedex Telephone: ++33/ (0)1 / 69 19 46 76 Telefax: ++33/ (0)1 / 69 81 72 57 E-Mail: division.batiment@wagner-france.fr
Netherlands WAGNER SPRAYTECH Benelux BV Zonnebaan 10 NL- 3542 EC Utrecht PO Box 1656 3600 BR Maarssen Telephone: ++31/ (0)30 / 241 4155 Telefax: ++31/ (0)30 / 241 1787 E-Mail: info@wagner-group.nl	**Italy** WAGNER COLORA S.r.l Via Fermi, 3 I- 20040 Burago di Molgora (MI) Telephone: ++39/ 039 / 625021 Telefax: ++39/ 039 / 6851800 E-Mail: info@wagnercolora.com
Japan WAGNER Spraytech Ltd. 2-35, Shinden Nishimachi J- Daito Shi, Osaka, 574-0057 Telephone: ++81/ (0)720 / 874 3561 Telefax: ++81/ (0)720 / 874 3426 E-Mail: marketing@wagner-japan.co.jp	**Austria** J. WAGNER GmbH Otto-Lilienthal-Str. 18 Postfach 1120 D- 88677 Markdorf Telephone: ++49/ (0)7544 / 5050 Telefax: ++49/ (0)7544 / 505200 E-Mail:service.standard@wagner-group.com
Sweden WAGNER SVERIGE AB Muskötgatan 19 S- 25466 Helsingborg Telephone: ++46/ (0)42 150 020 Telefax: ++46/ (0)42 150 035 E-Mail: mailbox@wagner.se	**Spain** WAGNER Spraytech Iberica S.A. Ctra. N- 340, Km. 1245,4 E- 08750 Molins de Rei (Barcelona) Telephone: ++34/ (0)93/ 680 0028 Telefax: ++34/ (0)93/ 668 0156 E-Mail: info@wagnerspain.com
Czechoslovakia WAGNER s.r.o. Na Belidle 1/63 C- 15000 Praha 5 Telephone: ++420/ (0)2/ 573 123 24 Telefax: ++420/ (0)2/ 545 001 E-Mail: wagner.s.r.o.@telecom.cz	**USA** Walter Pilot North America 46890 Continental Drive Chesterfield, MI 48047 USA Telephone: ++1/ 877 / 925-8437 Telefax: ++1/ 586 / 598-1457 http://www.waltherpilotna.com

Order number 0111861

Germany
J. WAGNER GmbH
Otto-Lilienthal-Str. 18
Postfach 1120
D- 88677 **Markdorf**
Telephone ++49/ (0)7544 / 5050
Telefax ++49/ (0)7544 / 505200
E-Mail: service.standard@wagner-group.com

Switzerland
J. WAGNER AG
Industriestrasse 22
Postfach 663
CH- 9450 **Altstätten**
Telephone ++41/ (0)71 / 757 2211
Telefax ++41/ (0)71 / 757 2222
E-Mail: rep-ch@wagner-group.ch

www.wagner-group.com